DISHWASHER

A dishwasher is designed to perform three functions: 1) fill, 2) circulate and 3) drain. If these three things are accomplished properly, yet there is some type of performance problem, most likely it is related to one or more of the following factors:

1. The water conditions (hardness and temperature).
2. The detergent and rinse additive usage.
3. The way the user operates and loads the dishwasher.

For example very hard water (over 15 grains per gallon) will make it practically impossible to get excellent results from any dishwasher. Similarly, the amount of detergent used will have an effect on the results as will the loading procedures.

It is relatively easy and always a good idea to check the mechanical operation of the dishwasher before assuming it is being used incorrectly, if everything is operating properly, then the source of the problem could be in its usage.

Sometimes it is not easy to isolate the other factors which could contribute to poor dishwashing performance. Take a close look at each of the elements listed above. In the dishwasher's usage will yield improved results. The information on the following pages will help you identify and solve these non-mechanical problems.

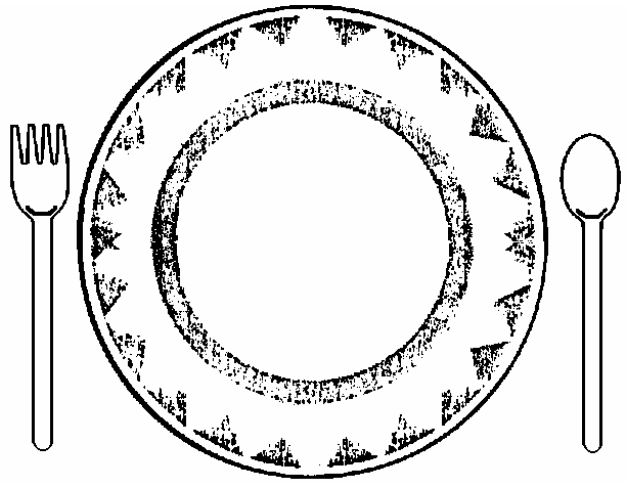

Table of Contents

Installation & Specifications

VUD040 / VUD141 specifications---------- 602
VUD 24” Dimensions---------- 603
DFUD041 / DFUD141 Specifications---------- 604
DFUD 24” Dimensions---------- 605
Drain Supply---------- 606

Under-counter Dishwasher

VUD141---------- 607
VUD141 Cycle / water usage---------- 608
Super Clean System---------- 609
Poor Dishwasher Results---------- 610 / 613
Troubleshooting Guide---------- 614 / 616

Designer Series Dishwasher

DFUD140 Fault codes---------- 617
DFUD140 Wash Program---------- 618 / 619

Troubleshooting Guide

To clean pump---------- 620
Control (touch) Panels---------- 621
DFUD040 / DFUD140 Wash cycle options---------- 622
DFUD042 / DFUD142 Wash cycle options---------- 623
DFUD040 Fault testing---------- 624
DFUD140 Fault testing---------- 625
DFUD140 Indicator lights---------- 626
DFUD040 / DFUD140 Normal wash sequence---------- 627
DFUD042 / DFUD142 Drying selection & washing in upper / lower & both baskets---------- 628
Child Lock (DFUD142 only) ---------- 629
DFUD042 / DFUD142 Total reset & Service Menu---------- 629
DFUD042 / DFUD142 Troubleshooting Guide---------- 630 / 632

Customer Information

Customer Questions & Answers---------- 633 / 635
Hard water & cleanability---------- 636
Detergent & Rinse aid---------- 637
Washability---------- 638
Cloudy glassware---------- 639
Hard water filming---------- 640
Poor drying---------- 641
Dishwasher or dish discoloration---------- 642
Suds or foaming in dishwasher---------- 643
Chipping of dishes or glassware---------- 643
Metal marks -- Silverplate discoloration---------- 644
Stainless Steel discoloration---------- 645
Dishwasher SAFE guidelines---------- 646

Basic specifications

Description	24" WIDE DISHWASER * VUDO40 / VUD141
Overall Width	23 7/16" (59.5 cm) without side trim 2315/16" (60.8 cm) with side trim
Overall Height from Bottom	32 1/4" (81.9 cm) minimum 35" (88.9 cm) maximum
Overall Depth from Rear	To edge of side -- 21 13/16" (55.4 cm) To end of handle bracket 24 1/4" (61.5 cm) With door open -- 45 1/4" (114.9 cm)
Cutout Width	23 1/2" (59.7 cm) without side trim 24" (61.0 cm) with side trim
Cutout Height	32 5/16" (82.1 cm) minimum 35 1/16" (89.1 cm) maximum
Cutout Depth	21 13/16" (55.4 cm) minimum
Electrical Requirements	120VAC/60Hz; 6' (1.8 m) electrical cord supplied with unit
Water-Heating Element Rating	1,600 watts -- VUC141 1,400 watts -- VUC040
Maximum Amp Usage	16.0 amps
Approximate Shipping Weight	121 lb. (54.5 kg)

*Must be 2" (5.1 cm) clearance to side wall if installed in a corner.
All electrical and plumbing connections must conform to local codes.

Basic water supply data;

* Inlet water temperature - 120°F (49°C) minimum at the dishwasher recommended; however, dishwasher will perform properly with cold water (see 55°F/13°C columns on cycle date chart)
* Inlet water preasure operating range - 15 to 176 psi (103 to 1,213 kPa)
* Unit supplied with 6' (1.8 m) PEX water supply line that has a 3/8" (1.0 cm) NPT female connection.

Basic drain data:

* 6 1/2' (2.0 m), 3/4" (1.9 cm) ID "crimp-proof" rubber drain hose with clamp attached to dishwasher; can be extended up to a maximum of 10' (3.1 m) with 3/4" (1.9 cm) ID copper tubing.
* High loop of drain hose required
* Minimum heitht from floor - 20" (51.0 cm)
* Maximum height from floor - 35" (88.9 cm)
* Conect drain hose to drain motor/pump (right front of dishwasher under lower panel)
* Check local codes for air gap requirement in drain line.

Units prior to serial # 0125-00710578

* Inlet water tubing size -- 3/8" (1.0 cm) OD minimum; fill valv has 3/8" (1.0 cm) OD NPT female connection (fill valve is at right of dish-washer under lower panel).
* Hard wire direct to electrical box (middle of dishwasher under lower panel).

Cycle data

Description	DISHWASHER														
	140°F or 165°F (60°C or 74°C) (Prewash detergent from door)	(Prewash detergent from door)	Rinse	Rinse	140°F or 165°F (60°C or 74°C) Main Wash (detergent from dispenser)	Rinse	140°F or 165°F (60°C or 74°C) Final Rinse (rinse agent from dispenser)	Heated or No-Heat Dry	Total Water Gallons (liters) (approx.)	Total Time Minutes (approx.) 55°F (13°C) Input Water		Total Time Minutes (approx.) 120°F (49°C) Input Water		Total Time Minutes (approx.) 140°F (49°C) Input Water	
										A*	B*	A*	B*	A*	B*
Pots/Pans	•		•	•	•	•	•	•	5.9 (22.5)	104	131	85	113	77	111
Normal Wash		•	•		•	•	•	•	4.9 (18.8)	91	108	76	97	70	83
Light/China		•			•	•	•	•	3.9 (15.0)	85	102	69	88	64	79
Rinse/Hold			•						1.0 (3.8)	4	5	4	5	4	5
Plate Warm								• heated	--	9	10	9	10	9	11

• A -- VUD141 model with water heated to 140 F (60 C)
• B -- VUD141 model with water heated to 165 F (74 C)
• Based on this cycle and U.S. Department of Energy test procedures, Energh Guide label annual usage amounts are $23.00 for gas water heater and $35.00 for electric water heater.
• Total energy is a combination of energy to operate dishwasher (no-heat dry selected 50% of time) and energy to heat water from 50°F (10°C) to 140°F (60°C) in separate hot water heater.
• Before purchasing this appliance, read important energy cost and efficiency information available from your retailer.

VUD 24" wide dishwasher -- dimensions

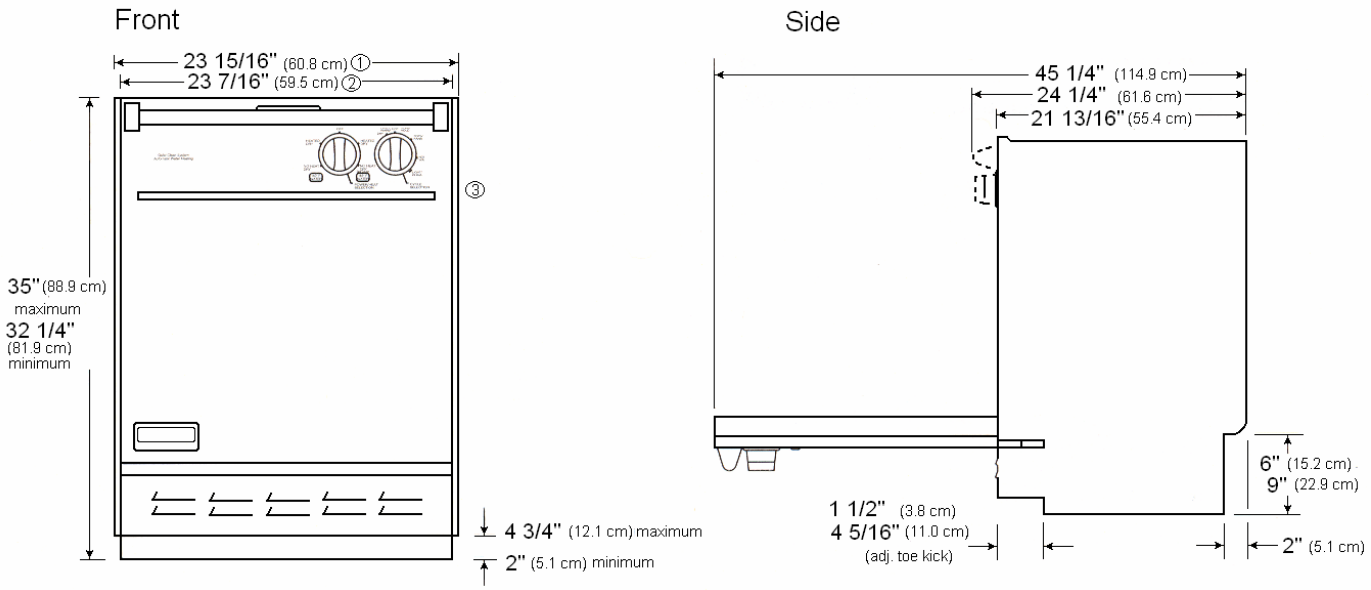

① With 1/4" (.6 cm) wide side trim attached (shipped with dishwasher)
② Without side trim attached
③ With optional 2" (5.1 cm) high lower panel, dishwasher will match metric cabinet toe space height of approx. 6" (15 cm)

CUTOUT DIMENSIONS	
A	32 15/16" (82.1 cm) minimum 35 1/16" (89.1 cm) maximum
B	23 1/2" (59.7 cm) without side trim 24" (61.0 cm) with side trim
C	21 13/16" (55.4 cm)) minimum
D	2" (5.1 cm) minimum 4 3/4" (12.1 cm) maximum
E	2" (5.1 cm)
F	6" (15.2 cm) minimum 9" (22.9 cm) maximum

Cutout

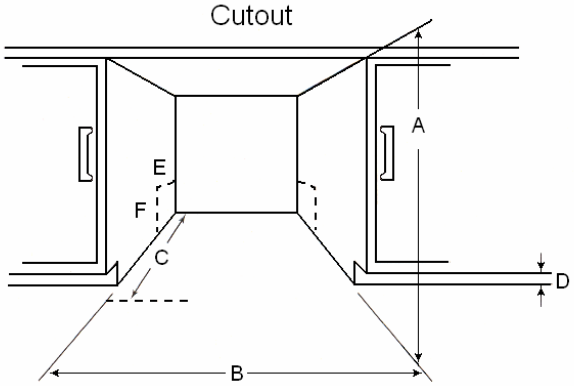

■ Must be 2" (5.1 cm) clearance to side wall if installed in a corner

Basic specifications

Description	24" WIDE DISHWASER * DFUD041 / DFUD141
Overall Width	23 1/2" (59.7 cm) without side trim 23 7/8" (60.6 cm) with side trim
Overall Height from Bottom	34" (86.4 cm) minimum 36 3/4" (93.3 cm) maximum
Overall Depth from Rear	To edge of side -- 24" (61.0 cm) (includes drain hose and door panel); With door open -- 49" (124.5 cm)
Cutout Width	23 5/8" (60.0 cm) without side trim 24" (61.0 cm) with side trim
Cutout Height	34 1/8" (86.7 cm) minimum 36 7/8" (93.7 cm) maximum
Cutout Depth	24" (61.0 cm)
Electrical Requirements	120VAC/60Hz; 6' (1.8 m) electrical cord supplied with unit
Water-Heating Element Rating	1,200 watts
Maximum Amp Usage	15.0 amps
Approximate Shipping Weight	113 lb. (51.0 kg)

Basic water supply data;

* Inlet water temperature - 120°F (49°C) minimum at the dishwasher recommended; however, dishwasher will perform properly with cold water (see 60°F/15°C columns on cycle date chart)
* Inlet water preasure operating range - 18 to 176 psi (125 to 1,227 kPa)
* Unit supplied with 6' (1.8 m) PEX water supply line that has a 3/8" (1.0 cm) NPT female connection.

Basic drain data:

* 6/1/2' (2.0 m), 3/4" (1.9 cm) ID "crimp-proof" rubber drain hose with clamp attached to dishwasher; can be extended up to a maximum of 10' (3.1 m) with 3/4" (1.9 cm) ID copper tubing.
* High loop of drain hose required
* Minimum heitht from floor - 24" (51.0 cm)
* Maximum height from floor - 35" (88.9 cm)
* Conect drain hose to drain motor/pump (right front of dishwasher under lower panel)
* Check local codes for air gap requirement in drain line.

* Must be 2" (15.1 cm) clearance to side wall if installed in a corner.

All electrical and plumbing connections must conform to local codes.

Cycle date -- DFUD041 and DFUD141

Description	Water Temperature	Pre-Wash	Main Wash	Rinse
Pots/Pans	140°F or 170°F (60°C or 77°C)	1	1	3
Heavy	130°F or 160°F (55°C or 70°C)	1	1	2
Normal	130°F or 140°F (55°C or 60°C)	1	1	2
Light/China	105°F or 120°F (40°C or 50°C)	1	1	2
Quick	85°F (30°C)	–	1	1
Rinse/Hold		–	–	1

Description	Extra Dry Option	Total Water Gal (L)	Total Wash Time - Minutes: Input Water 60°F (15°C) A	Input Water 60°F (15°C) B	Input Water 120°F (49°C) A	Input Water 120°F (49°C) B
Pots/Pans	yes	4.5	240	230	190	195
Heavy	yes	4.5	210	220	175	185
Normal	yes	3.4	110	120	85	95
Light/China	yes	2.4	110	115	85	90
Quick	no	2.1	25		15	
Rinse/Hold	no	0.8	4		4	

A -- using the lower water temperature setting
B -- using the higher water temperature setting
NOTE: Includes time for dry

Express option available for Pots/Pans, Heavy, Normal, and Light/China cycles on DFUD141 Model only.

Reduces washing time and lowers temperature (not available on Quick wash or Rinse/Hold)

DFUD 24" wide dishwasher – dimensions

Side

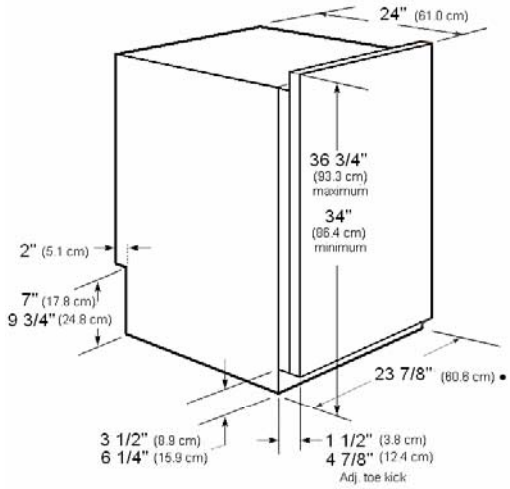

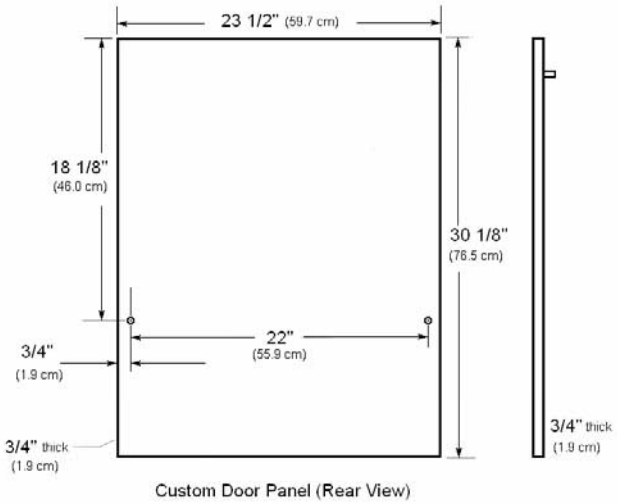

• Without side trim, unit is 23 1/2" (59.7 cm)

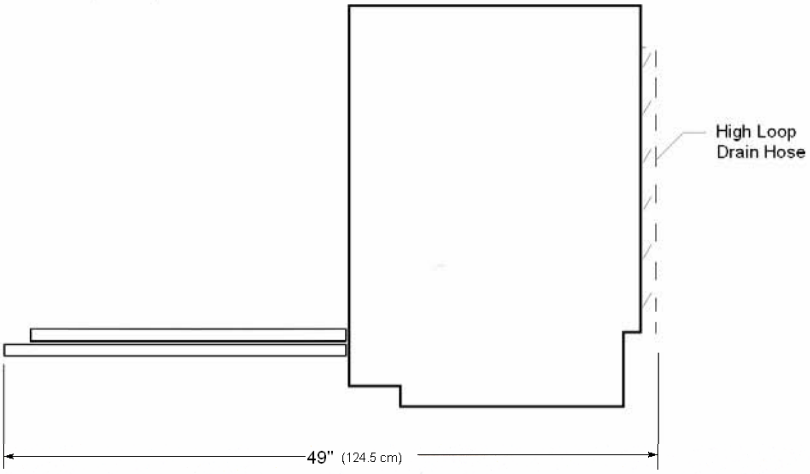

Cutout

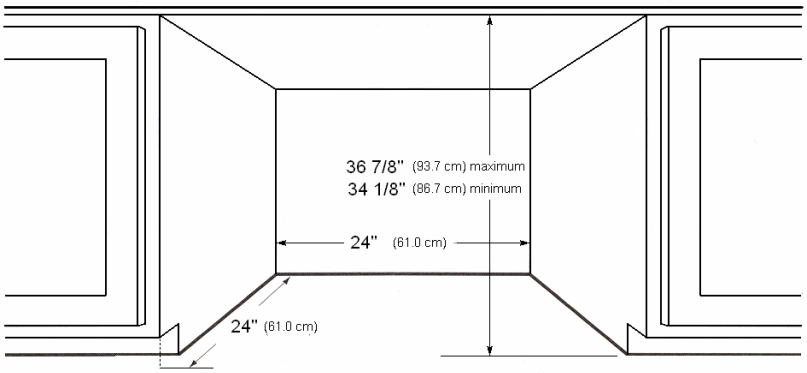

Cutout must be 23 5/8" (60.0 cm) without side trim.

Kitchen cleanup products

DRAIN SUPPLY (Proper installation)

Viking provides a 7/8” drain hose which is connected to the back of the unit to form a high loop. If additional drain hose is needed, please purchase an additional Viking drain hose and join it to the provided hose with a 7/8” copper tube. (Do not use any fittings anywhere in the drain line that are less than 7/8” ID).

The access hole for the drain line should be 1 ½”.

The end of the drain line is ½”, but it is adjustable to 7/8”, ¾” 5/8”. If the drain connection is larger than ½”, you can easily cut the drain line to fit the connection.

The illustration to the left show three different ways to connect the drain supply line.

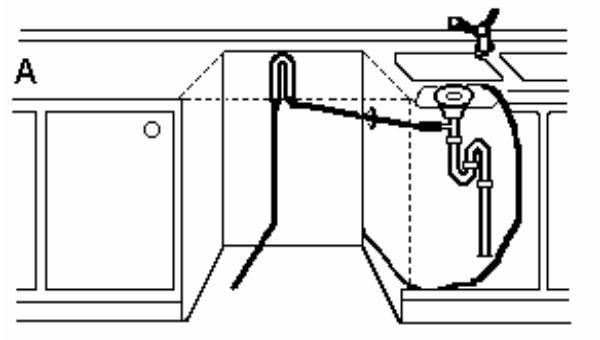

THE HIGH LOOP

All Viking dishwashers have drain hoses attached to the drain pump and fastened to the back of the unit. This gives the drain hose an automatic high loop, which is necessary for proper draining. The drain hose is fastened at the best loop height with a plastic zip tie. To eliminate potential drain problems, simply leave this hose in place.

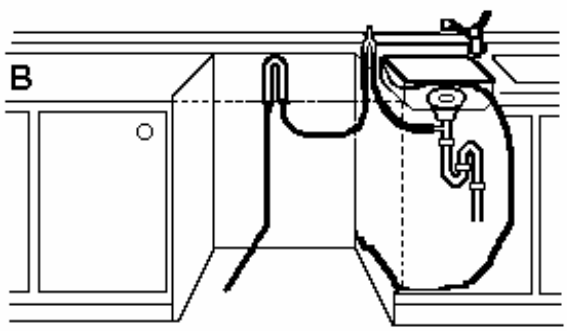

IMPORTANT THINGS TO REMEMBER

- Failure to provide the proper drain connection height (minimum of 20” above the bottom of the dish washer base) lower than a 20” high loop will result in improper drainage, which will damage the machine.
- No part of the drain hose should be higher than 35” from the bottom of the dishwasher.
- The hose must be drawn straight to a floor well or its equivalent because it might function as a siphon and empty the machine.
- The drain hose can be extended to a maximum length of 10 feet. Joints and jointed tubes, if any, must have an ID of at least 7/8”.
- If the drain line is going to be connected to a waste disposer, be sure to remove the knockout or plug from the fitting on the disposer before connecting the drain line.
- Don’t use fittings smaller than 7/8”, otherwise the water may not drain properly.

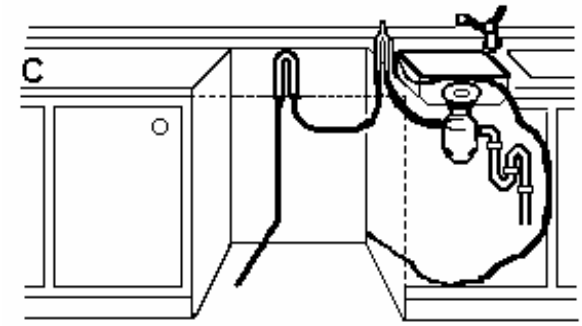

UNDERCOUNTER DISHWASHER
(VUD141)

Serial stickers are located on the right side of the door. When your serial number has 12 digits you will need to remove the last 4 digits to read the manufactures date code;

EXAMPLE: MODEL #VUD141 / SERIAL # 971900216609

97 (year) 19 (week) 0021 (production code)

• **Turn on the power switch**	• **Select 140°F Water and Heated or No Heat Dry OR Select 165°F Water and Heated or No Heat Dry**	• **Turn the control knob to either Rinse / Hold or one of the wash settings. The dishwasher will start.**

Which cycle / option to select

140°F / SANI CYCLE 165°F

You may select 140°F or 165°F water temperature for the first fill of the pots/pans cycle and for the main wash and final rinse of all full cycles. It is recommended to use 140°F water for normal day-to-day dishwashing. Select 165°F water for special sanitizing benefits.

HEATED / NO HEAT DRY

You may select heated or no heat dry with any wash cycle. Dishes will dry more completely with heated drying, however, no heat drying is more economical. When using no heat dry, the dishwasher will go through the same entire timed drying cycle, but with no added heat.

RINSE / HOLD

This program provides a single, unheated rinse to be used when waiting to start a complete wash cycle. For example, it is useful in rinsing salty or highly acidic foods off stainless steel, silver and silver plate if you are not planning on running the dishwasher through a wash cycle immediately after loading such items.

POTS / PANS

This setting includes three prewashes for extra cleaning. Use it for cleaning heavily soiled items such as pots, pans, and baking dishes.

NORMAL WASH

Use this setting, with its two prewashes, for normally soiled dishes.

LIGHT / CHINA

This setting, with one prewash, is used for washing lightly soiled and/or delicate items.

PLATE WARM

With a completely clean dishwasher, load the plates, set the cycle selection knob to plate warm, and then turn the power heat knob to heated dry. This setting is a dry heat cycle for warming plates. No water is involved.

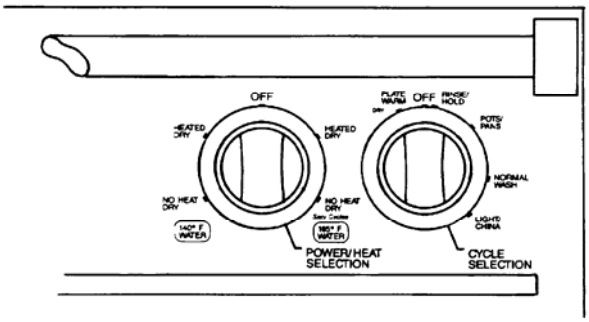

The vent solenoid is adjustable by approximately 1/4 “. Don’t adjust beyond the 1/4".

Drying time is 12 minutes; however the heating element doesn’t stay n all the time. The T-stat sets the temperature to 140 degrees or 165 degrees depending on the temperature control setting and will cycle during the drying cycle.

Normal wash cycle will be approximately 1.5 hours when the input water is less than 145 degrees. Normal wash cycle will be approximately 3/4 hour when the input water is over 145 degrees.

The water is heated while recirculating.

Dishwasher cycles water usage/time

CYCLE	TOTAL WATER GALLONS (APPROX.)	TOTAL TIME-MINS. (APPROX.) 55°F INPUT WATER		TOTAL TIME-MINS. (APPROX.) 120°F INPUT WATER		TOTAL TIME-MINS. (APPROX.) 140°F INPUT WATER	
		140°F	165°F	140°F	165°F	140°F	165°F
RINSE / HOLD	1.0 (3.8L)	3	3	3	3	3	3
POTS / PANS	5.9 (22.5L)	103	129	84	111	76	109
NORMAL WASH	4.9 (18.8L)	90	106	75	95	69	81
LIGHT / CHINA	3.9 (15.0L)	84	100	68	86	63	77
PLATE WARM	-	8	8	8	8	8	8

How the dishwasher works

CYCLE	PREWASH	MAIN WASH	RINSE	DRY
RINSE / HOLD			▭	
POTS / PANS	■ ▭ ▭	■	▭ ■	▨
NORMAL WASH	▭ ▭	■	▭ ■	▨
LIGHT / CHINA	▭	■	▭ ■	▨
PLATE WARM				▨

■ = WATER IS HEATED TO 140°F (60°C) OR 165°F (74°C)

▭ = WATER IS NOT HEATED

▨ = HEATED OR NO HEAT DRY

Super clean system: Normal cycle

1) Set Temperature
2) Turn to On
3) Drain Pump will be on for 30 sec.
4) Fill Valve will open for 60 sec. Supplying 1.3 gallons of water.
5) Prewash for 5 or 6 min (Not Heated)
6) Drain Pump turns on and drains water to just over the top of the filter (1/8")
7) Then the Circulating Pump turns on the 45 to 50 sec. to wash the bottom of the tank and filter.
8) Actions stops for 1 minute.
9) The Drain Pump turns on and drains unit
10) The Fill Valve turns on and regular wash begins.
11) After water reaches the set temperature the unit will wash for 20 minutes.
12) Stops
13) Drain Pumps for 30 seconds.
14) Fill Valve on for 60 seconds (1 minute)
15) Rinses for 4 minutes.
16) Drains.
17) Refills for 2nd rinse (5 minute rinse cycle after reaching set temperature.)
18) Drains
19) Heating Element on for drying cycle. (The heating element will cycle on and off depending on the temperature setting during the drying cycle.)
20) Vent opens after 30 seconds into the drying cycle.
21) Drying cycle is approximately 12 minutes.

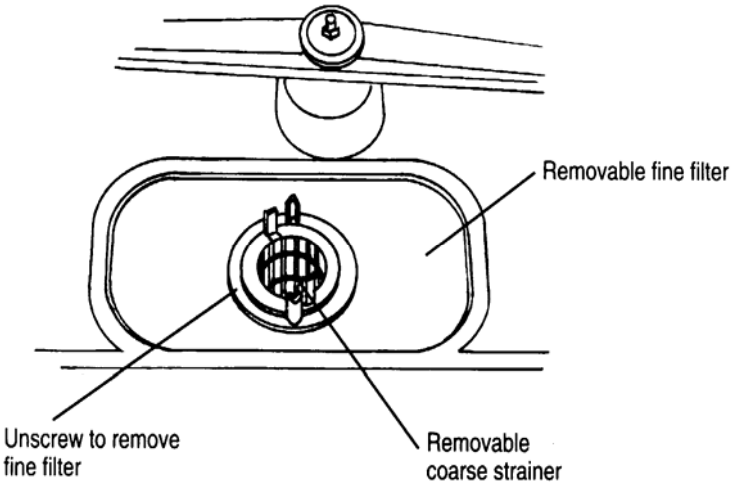

- Plugged fine filter: Unscrew horizontal filter which is located in the center of fine filter. Remove the filter and clean the underside. Replace fine filter and screw horizontal filter back in place.
- Lift out the coarse strainer and empty the large objects that cannot pass through the drain pump.

POOR DISHWASHING RESULTS

Try the following remedies. Poor results may not always be caused by the dishwasher. Read through the chart below before contacting your servicer.

Problem	Possible Cause	Suggested Remedy
Spotting and filming	Hard water	Use the maximum recommended amount (3 tablespoons) of dishwasher detergent. You may need a home water softener. To remove hard water spots, try a vinegar rinse. • Wash and rinse load as usual. • Remove all metal items from dishwasher. • Do not add detergent. • Pour two cups of vinegar into a bowl and set it on the bottom rack of the dishwasher. • Run the dishes through and entire wash program. If the vinegar rinse doesn't work, repeat the above process substituting 1/4 cup citric acid crystals (available at most drug stores) for the vinegar. Wiping with a damp cloth should remove spots from metal items. For sterling and silver plated flatware, rub with a towel, or use a good cream silver polish.
	Filter system	Check filter system to be sure it is clean and properly installed.
	No rinse aid	Does the rinse aid dispenser need to be filled? (Note: use only in hard water areas.)
	Too little water	Check that the water valve is fully open. Make sure that the water pressure is between 15 and 176 PSI. **Check filter in the inlet valve.**
	Dishwasher detergent	Use only the correct amount of dishwasher detergent according to the hardness of the water and the wash program you have selected. Do not use old or caked detergent. Store dishwasher detergent in a dry place and in a closed container. **Change the dishwasher detergent if the result is still unsatisfactory.**
	Items not loaded properly	Check that you are loading the items according to the instruction in Your guide. **Do not overload. Make sure water can reach all soiled surfaces.**
	Wash arms rotation poorly or stand still	Check that both wash arms can rotate freely and that items do not obstruct the movement of the wash arms. Lift the arms and make sure that no grains of dirt, etc retard the rotation of the wash arms. If necessary, clear the obstruction, refit the arms and check that they rotate. **Make sure that the holes in the wash arms are not blocked by dirt, if necessary, clear the holes with a pointed object.**
	Strainer blocked	Check the strainer. Clear if necessary.
	Excessive foam in the machine	Use only dishwasher detergent.
	Flatware incorrectly	Pay particular attention to spoons so that they do not nest in each other and Prevent water penetration.

POOR DISHWASHING RESULTS (Con't)

Problem	Possible Cause	Suggested Remedy
Small particles deposited on items	Wash arm or arms not rotating freely	Be sure a utensil or handle has not prevented their turning.
	Detergent	Use only fresh detergent, store in a tightly closed container in a cool dry place. Fill dispenser only when ready to start the dishwasher. Use the recommended amount of detergent, especially with hard water.
	Low water pressure	Check that the water valve is fully open.Make sure that the water pressure is between 15 and 176 PSI.
	Improper loading of dishes	Load dishes to prevent water and detergent from being trapped in or between items. Water should circulate freely.
Marks and discoloration	Aluminum utensils rubbing against items during washing	Be sure aluminum utensils, especially light weight foil type pans, do not touch dishes. To remove spots, use a non-abrasive cleaner.
Yellow or brown	Iron or manganese marks	Temporary solution: Pour 1 teaspoon to 1 tablespoon of citric acid crystals in water instead of the pre-wash detergent directly on the inside of the door. Follow this pre-wash with a full detergent wash. Use the pots / pans or normal wash cycle. **Permanent solution: Install an iron removal system in the water supply.**
	Copper with sterling silver	Yellow film on sterling silver results when you wash copper utensils in the same load. Silver polish will usually remove this stain.
	Tea or coffee (tannic acid)	Tea or coffee can stain cups. Remove stains by hand, using a solution of ½cup bleach and 3 cups warm water. (Do not use on sterling silver or silver plate.)
Discoloration of stainless steel silver plate or	Allowing salty or acidic foods to remain on flatware	Rinse flatware that is to stand several hours before washing.
	Stainless steel compartment.	Do not put stainless steel and silver flatware in the same silverware basket Direct contact between these metals can cause permanent damage to silver. Clean stained items with silver polish. Do not use abrasives on stainless steel or silver
Distortion of plastics	Plastic item has low heat tolerance	Plastics vary in their ability to tolerate heat. Check washing instructions for all plastic items to be sure they are dishwasher safe. If they are, place in top rack away from the heating element.
Marks on mela-mine and plastics	Porous material	Use a special cleaner for plastic. **Do not use bleach or scouring powder on these items.**

POOR DISHWASHING RESULTS (Con't)

Problem	Possible Cause	Suggested Remedy
Cloudy film on glassware-etching of glass	Too much detergent especially in soft water	If vinegar or citric acid rinse doesn't remove film, the cloudiness is "etching". This is permanent. To prevent etching , use the least amount (1 teaspoon) of recommended dishwasher detergent if you have soft water. **Use a good quality dishwasher detergent and rinse aid**. Do not overload the machine. Water should circulate freely to assure adequate rinsing and draining. **Use drying without heat.**
	Rinse aid used with soft water	Use rinse aid in hard water areas only.
Dishes not dry	Non-heated drying	Be sure to select heated drying for best results. Allow more drying time when using non-heated drying.
	No rinse aid	Fill rinse aid dispenser. Rinse aid helps dishes to dry faster. (Note: Used only in hard water areas).
	Plastic items	Certain plastics materials are difficult to dry. Plastics may need towel drying.
	Improper loading or unloading	Do not overload items. Be sure all surfaces drain well. Load items with concave bases so as much water as possible can run off. Unload the bottom rack first. Water from dishes in the top rack may be spilling into the bottom rack.
	Dry cycle interrupted	If the door is opened during the heated dry cycle, the heating element comes back on after the door is reclosed. If the dishwasher door is opened immediately after the dry cycle is completed and then shut again, the vent door is closed, trapping warm humid air. It is best then to leave door open slightly.
Detergent left in detergent compartment (detergent compartment will not open)	Compartment cover blocked	The cover may not be opening because of improperly loaded items. Move dishes that may be blocking it.
	Old detergent	If detergent is hard or caked in the box, throw it away. Use only fresh detergent. Add detergent to dishwasher right before starting it.
Chipping or breaking of glassware	Improper loading	Do not overload. Load between prongs, not over them. Glasses loaded over prongs will not be supported and may chip or break. Make sure glassware is secure and can't come loose. Always use top rack for delicate items. Use the light/china cycle.
Unusual noise	Improper loading	Utensils may not be secure or something small may have dropped from the rack. Water may cause utensils to rattle. Make sure everything is securely placed in the dishwasher.

POOR DISHWASHING RESULTS (Con't)

Problem	Possible Cause	Suggested Remedy
Water left in bottom of dishwasher near filters	Dishwashing cycle not complete	Allow dishwasher to complete cycle.
	Some is normal	Water left in removable coarse strainer is normal.
Dishwasher will not drain	Air gap	Be sure air gap is not blocked or plugged.
	Drain hose	Check for kink in drain hose.
	Filter system	Be sure there is no blockage in filter system. Remove, clean and place back in dishwasher before starting dishwasher.
	Clogged drain pump	Clean drain pump.
Dishwasher will not start	Blown fuse or tripped circuit breaker	Replace fuse or reset circuit breaker. Remove any other appliance from the circuit.
	Door not completely closed	Close tightly until you hear a click.
	Control on "OFF"	Turn the POWER/HEAT knob to the appropriate setting.
Dishwasher will not fill	Door open	Check that door is firmly closed.
	Controls	Check that dishwasher is on.
	Water supply	Be sure water is available and turned on.
Water backs up in sink when dishwasher drains	Food waste disposer and trap	Check disposer and trap at sink for blockage or food particles.

TROUBLESHOOTING GUIDE ----*DISHWASHER* ----		
PROBLEM	PROBABLE CAUSE	SOLUTION
Not Filling With Water	1. Water Valve off 2. Undercarriage flooded (See continuous drain 3. Open fill valve 4. Clogged fill valve 5. Loose connection 6. Door switch 7. Timer or selector open or burned contacts	1a. Turn water valve on 2a. Clogged air gap, hose, pump b. Loose waterline connection c. Hole in system hose: pump, drain, washer motor, spray arm 3a. Replace fill valve 4a. High water pressure, stuck fill valve, faulty pressure switch 5a. Check all wiring and repair 6a. Open or switch out of bracket 7a. Replace as needed
Unit always on or not turning on when door (Interior light hot when door first opened)	1. Check door switch. Door switch may : a. Open b. Come loose from bracket c. Have burnt wire ends (connector) d. Separated at seal Check door switch bracket (lock guard). Bracket may have a weak containing arm for the micro switch.	a. Replace door switch b. Replace bracket and switch, if needed. c. Replace wire or wire connectors d. Replace door switch
Continuous Drain (Undercarriage full of water)	1.Check for a clogged drain system In states where air gaps exist or in homes where an air gap is installed, check for a clogged air gap or drain hose. 2.Any restriction from the drain pump can cause a build up of pressure and a temporary separation of the drain pump housing, thus filling the 3.When the under carriage fills with water a float safety switch is activated causing the unit to go into a pump out mode. The dishwasher must be disconnected from power and the water in the undercarriage removed completely in order to reset the dishwasher into a normal mode. 4.Check overflow switch	1a. Clear clog and advise customer on how to maintain a clean air gap 2a. In some cases two (2) drain hoses may be connected causing a vortex at the connection. This vortex may cause larger particles to clog in drain hose or at vortex. Remember - anything can be found in drain hose. Some things to watch for are: toothpicks, fish bones, flatware, and crystal labels, seeds, broken toys, etc. 4a. Replace open overflow switch

Continuous Drain (Con't)	5. Check for leaks: 5a. At door 5b. Lens cover for interior light 5c. Hoses and loose clamps 6. Timer motor may have stalled 7. Timer may be misaligned to causing timer to freeze up when cycling.	 5a. Plum and square dishwasher 5b. Replace lens mount and lens 5c. Tighten fittings or advise customer to contact installer or plumber. (Recommend using an original hose clamp and crimping tool) 6a. Replace timer 7a. Align timer
Rapid timer advance	1.Faulty timer 2.Under carriage full of water	1a. Replace timer 2a. (See continuous drain)
Excessive water in tub	1.Check when float switch is activated	1a. Replace float switch 2a. Check for leak in hose
Interior too hot or melting silverware container and rack	1. Element shaped incorrectly 2. Temperature switch out of bracket or temperature switch remaining closed beyond high limit.	1a. Bend element down in high areas 1b. Replace element 2a. Remount temperature switch 2b. Replace faulty temperature switch 2c. Replace damaged parts
Film on dishes	1. Water contains too many minerals. 2. Unit reusing old water or (See continuous drain) 3. Open drain pump 4. Water not hot enough 5. Detergent dispenser tank empty or valve not opening	 1a. Notify customer 2a. Drain system clogged - clear drain 3a. Replace drain pump 4a. Heater coil open, fractured wire 5a. Check continuity to detergent dispenser
Base pan area full of water	(See continuous drain)	
Not drying dishes	1. Ventilator air fan malfunctioning 2. Blower fan not working 3. Solenoid open for circulating air flow. 4. Heating element open	1a. Check air flow through ventilator at bottom of door. 2a. Replace blower fan / check wiring 3a. Check continuity / replace solenoid 4a. Replace heating element.

Power supply: Always disconnect unit from power before servicing. **NEVER ASSUME:** 1) Unit voltage has been disconnected. Check line voltage at dishwasher. 2) Breaker will remain off during service - anyone at anytime for any reason may turn breaker on, take precautions, especially when other workers are on job site.

Mounting Problems: Always mount and secure dishwasher square and plum
Drain: Always use same size drain hose and connectors and do not detach drain hose from upper back mount.
Fill: Run fill line clear of all mechanisms and electrical connections. It is not recommended to use a metal braided fill hose.
Interior: Lime or mineral deposits can be cleaned with General Electric dishwasher lime and mineral cleaner.
Door: When removing door be cautious of wire length to door switch. Too much pull on the door switch wire can cause door switch to brake in half or come free of holding bracket.

To clean pump:

- You can reach the drain pump from inside the machine. First remove the coarse strainer and the fine strainer. Then you can remove a small cover in the bottom of the hole. There you can reach the pump impeller and remove the dirt. Replace the fine filter.

Trouble shooting

- **There is water left in the dishwasher:** If the dishwasher is taking in too much water, the drain pump starts automatically. If the water, in spite of this, is not drained off, it might depend on any of the following reasons:
  1). The filter is clogged.
  2). The pump is blocked. Pieces of bone or other foreign particles in the drain pump.
  3). The drain hose is clogged (blocked) Check to make sure that there are not obstacles in the hose where it connects to the water. Foreign particles can get lodged in the entrance of the connection line (see illustration). Also check to make sure that the cone-shaped connection line has been cut to an inner diameter of at least ¾".

The drain hose is kinked:
Check to make sure that there are no kinks in the drain hose.

Air gap:
If the machine is equipped with an air gap, be sure the air gap is not blocked or plugged.

1) Keep air gap clean.
2) Check air gap first if the drain becomes blocked and there is water left in the dishwasher.

The dishwasher does not start, check the following:

1) The door is not completely closed.
2) The POWER / HEAT knob is in the "off" position.

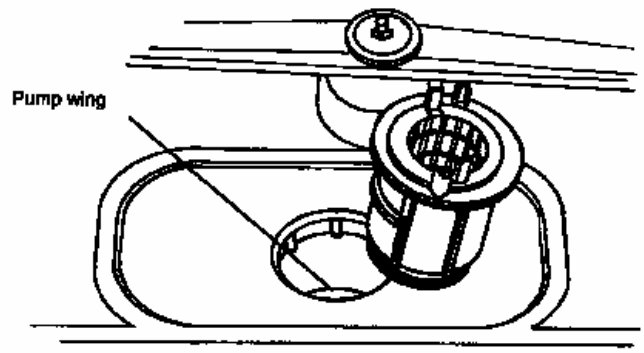

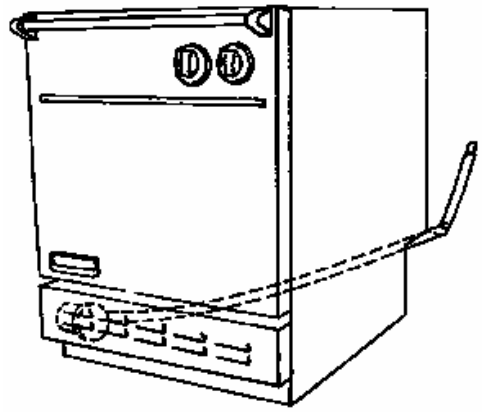

3) The CYCLE SELECTION knob is in the "off" position.
4) A fuse is blown or a breaker is open, check the electrical box.
5) The safety overflow float / switch in the base pan under the tank has turned off all power to the dishwasher. This means that there is a leak and water is accumulating in the base pan

The Pressure (level) **Switch** closes the Inlet Water Valve when the dishwasher has taken in too much water.

Low Water consumption—4.6 gallons in the normal cycle.

Low Detergent consumption because of low water usage.

VIKING RANGE
DESIGNER SERIES DFUD140 FAULT CODES

FAULT TRACING: PRESS TEMPERATURE FIVE TIMES AND THEN:

1) PRESS QUICK WASH ONCE FOR INLET VALVE.
2) PRESS RINSE AND HOLD ONCE FOR SOAP DISPENSER.
3) PRESS ECONOMY ONCE FOR HEATER.
4) PRESS HEATED DRY FOR CIRCULATION PUMP.
5) PRESS HEATED DRY FOR DRAIN PUMP.
6) PRESS DELAY START ONCE FOR FAN MOTOR.

INLET TIME ADJUSTMENT: PRESS ECONOMY FIVE TIMES AND THEN:

1) PRESS QUICK WASH TO GET NORMAL FILL TIME.
2) PRESS RINSE AND HOLD WASH TO INCREASE 25%.
3) PRESS ECONOMY TO INCREASE 50%.
4) PRESS TEMPERATURE TO INCREASE 100%.
5) PRESS HEATED DRY TO INCREASE 150%.
6) PRESS DELAY START TO INCREASE 200%.

DRAIN TIME ADJUSTMENT: PRESS QUICK WASH FIVE TIMES AND THEN:

1) PRESS QUICK WASH ONCE FOR A 20 SECOND DRAIN.
2) PRESS RINSE AND HOLD ONCE FOR A 25 SECOND DRAIN.
3) PRESS ECONOMY ONCE FOR A 35 SECOND DRAIN.
4) PRESS TEMPERATURE ONCE FOR A 45 SECOND DRAIN.
5) PRESS HEATED DRY ONCE FOR A 85 SECOND DRAIN.

PROTECTED START PROGRAM: PRESS RINSE AND HOLD FIVE TIMES AND THEN:

1) PRESS ECONOMY WASH ONCE FOR PROTECTED START.
2) PRESS RINSE AND HOLD ONCE FOR NORMAL START.

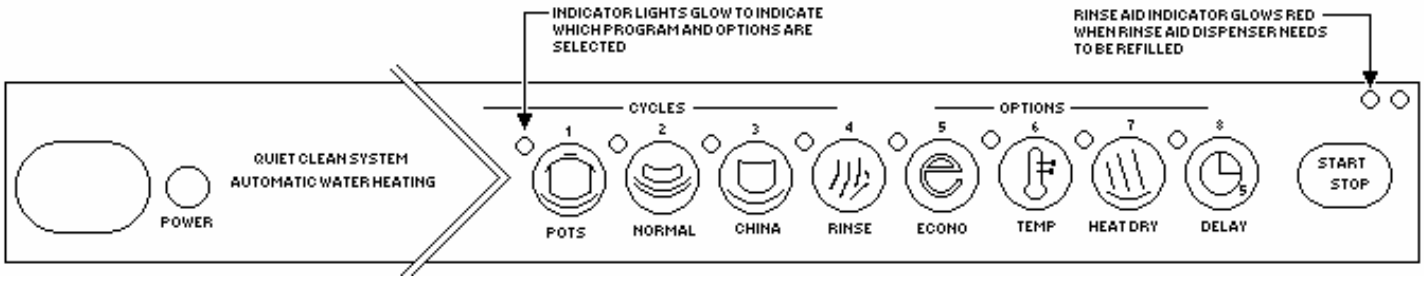

VIKING RANGE
DESIGNER SERIES DFUD140

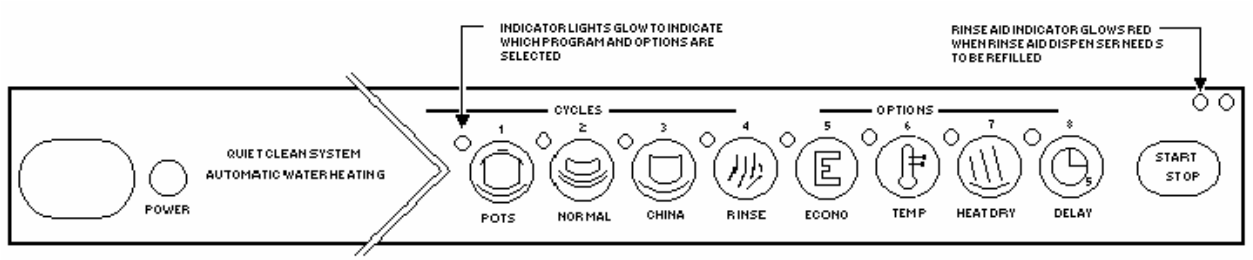

WASH PROGRAMS

Program		# of Prewashes	Main Wash	#of Rinses	Heated Drying	Cycle Time (Min.)	Max. Water Usage (Gal)
	Pots & Pans/Sani	2	Yes	2 short, 2 normal	Yes	100	6.6
	Normal	2	Yes	1 short, 1 normal	Yes	85	4.6
	Quick	1 short	Yes	1 short, 1normal	Yes	50	3.9
	Rinse & Hold	N/A	N/A	1 short	N/A	4	0.9

Notes: (1) During pre-wash, the dirty water is emptied and the next cycle starts clean water. (SCS=Super Clean System)
(2) You must have the Heat dry option on to activate heated drying.
(3) Cycle time is approximate. Variations will occur based on household water temperature and the time it takes the unit to heat the water entering the machine.

Options	**Definition**
Economy	When used with the low temperature, this option further reduces energy consumption without diminishing cleaning performance by lowering the water temperature in the prewash and main wash and extending the wash time.
Temp	Heats the main wash and rinse programs to the high temperature. The indicator light glows when high is selected.
Heat Dry	Activates the heating element during the drying cycle to speed up the drying process.
Delay	Delays starting the dishwasher for five hours. After selecting the wash program, press Delay then start.
Start/Stop	Press this button to Start or Stop the machine. To interrupt a program, hold this button down for three seconds.

MODEL: DFUD 140

PROGRAM	TEMP	PROGRAM TEMPERATURE (°F / °C) (1)						HEATED DRY
		1ST PREWASH	2ND PREWASH	MAIN WASH	1ST RINSE	2ND RINSE	FINAL (2) RINSE	
POTS & PANS/SANI	LO	113/45	HOUSE	131/55	HOUSE	HOUSE	131/55	YES
	HI	113/45	HOUSE	158/70	HOUSE	HOUSE	149/65	YES
NORMAL	LO	86/30	HOUSE	131/55	HOUSE	131/55	N/A	YES
	HI	86/30	HOUSE	149/65	HOUSE	149/65	N/A	YES
QUICK	LO	HOUSE	N/A	113/45	HOUSE	113/45	N/A	YES
	HI	HOUSE	N/A	131/55	HOUSE	131/55	N/A	YES
RINSE	N/A	HOUSE	N/A	N/A	131/55	N/A	N/A	YES

Notes: (1) The LED window displays the temperature in Celsius.

(2) The Pots and Pans/Sani and Normal programs can be programmed for an extra rinse. In that case, the temperatures for the extra rinse would be the household water temperature and the final rinse would be the last rinse temperature indicated in the table below.

HEATED DRYING CYCLE AND HEAT DRY OPTION

The Heating Element:		
Comes on to	Stays on for	goes off for*
158°F (70°C)	5 more seconds	8 minutes
158°F (70°C)	5 more seconds	4.5 minutes
		End of drying cycle

* The turbo fan continues to run during these intervals

INTERVAL DRYING

After the drying cycle, the turbo fan continues to come on for ten minutes every half-hour, for three hours or until the door is opened. This ensures 100% drying of porcelain, glass and cutlery.

To clean pump:

- You can reach the drain pump from inside the machine. First remove the coarse strainer and the fine strainer. Then you can remove a small cover in the bottom of the hole. There you can reach the pump impeller and remove the dirt. Replace the cover, strainer and fine filter.

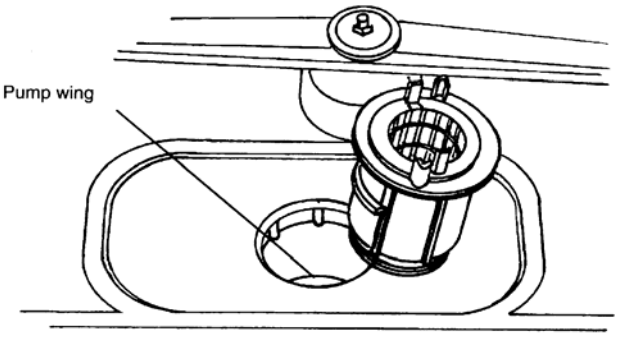

Trouble shooting

- **There is water left in the dishwasher:**
  If the dishwasher is taking in too much water, the drain pump starts automatically. If the water, in spite of this, is not drained off, it might depend on any Of the following reasons:
  1) The filter is clogged. (See Pg. #3)
  2) The pump is blocked. Pieces of bone or other foreign particles in the drain pump, (See above)
  3) The drain hose is clogged (blocked). Check to make sure that there are not obstacles in the hose where it connects to the water. Foreign particles can get lodged in the entrance of the connection line (see illustration). Also, check to make sure that the cone-shaped connection line has been cut to an inner diameter of at least 3/4".

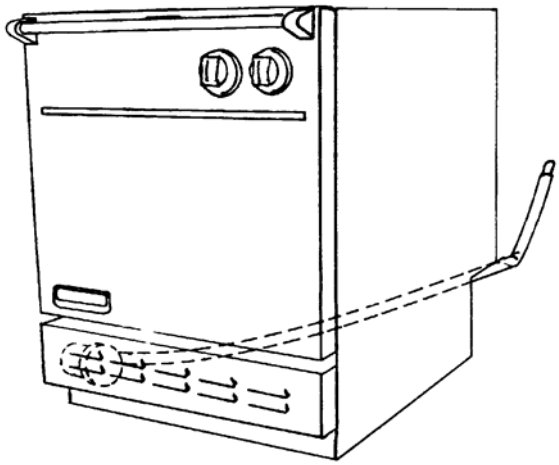

The Drain Hose is Kinked:
Check to make sure that the are no kinks in the drain hose.

Air Gap:
If the machine is equipped with an air gap, be sure the air gap is not blocked or plugged. 1) Keep air gap clean. 2) Check air gap first if the drain becomes blocked and there is water left in the dishwasher.

The Dishwasher does not start Check the following:
1) The door is not completely closed.
2) The POWER / HEAT knob is in the “off” position.
3) The CYCLE SELECTION knob is in the “off” position.
4) A fuse is blown or a breaker is open, check the electrical box.
5) The safety overflow float / switch in the base pan under the tank has turned off all power to the dishwasher. This means that there is leak and water is accumulating in the base pan.

The PRESSURE (LEVEL) SWITCH closes the INLET WATER VALVE when the dishwasher has taken in too much water.
LOW WATER consumption--4.6 gallons in the normal cycle.
LOW DETERGENT consumption because of low water usage.

Dishwasher Troubleshooting Information

The serial rating plate is located on the right hand side of the inner part of the door. Serial numbers are located in the lower right corner of the rating plate and give you the year and week of manufacture. Use complete serial number when referring for service.

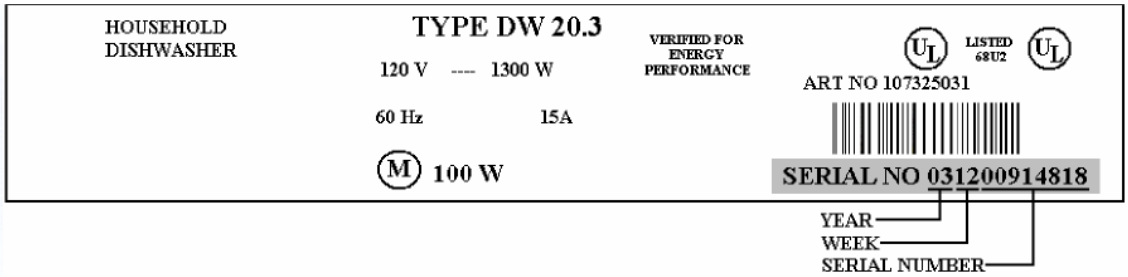

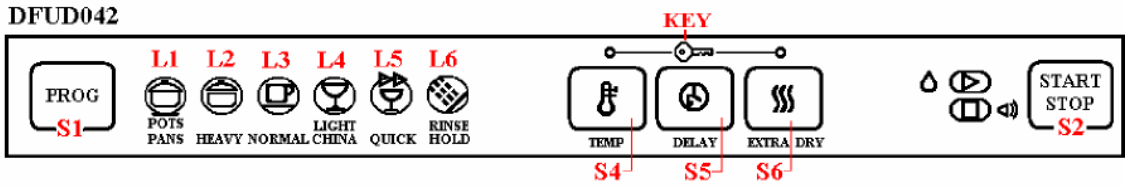

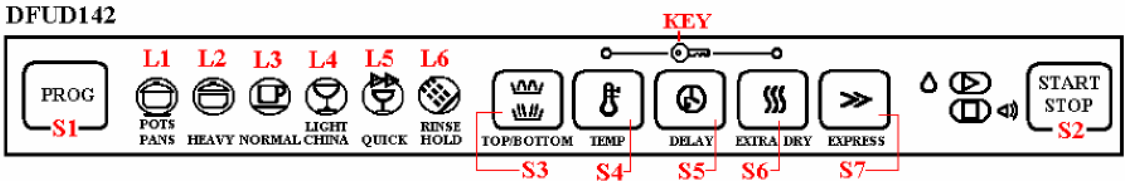

The buttons are on the top side of the control unit. The unit has six set programs and is available in two models, with three or five options.

CONTROL PANELS

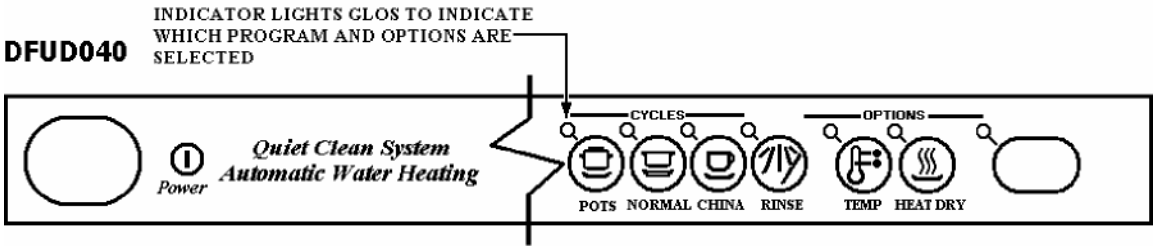

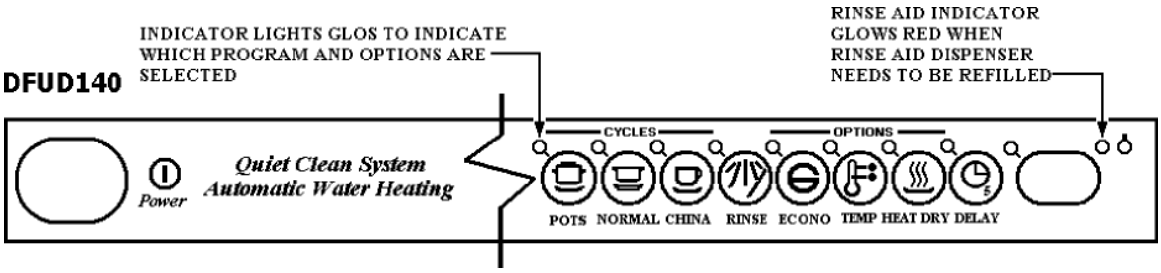

WASH / CYCLE OPTIONS DFUD040 – DFUD140 CHANGING A PROGRAM

Wash Cycles

Pots

For heaviest soiled loads, such as pots and pans.

Temp

Selects a high or low water temperature for the wash program. Indicator light glows when on the high setting and remains off when on low setting.

Extra Dry

Raises temperature in final rinse and extends the drying time

Rinse

To rinse dishes that you plan to wash later that day.

Econo

When with low temperature settings, this option further reduces energy consumption without diminishing cleaning performance by lowering the water temperature in the prewash and main wash and extending wash time. (DFUD140 only)

Normal

For normally soiled loads, such as plates, glasses, bowls and lightly soiled pans.

China

For lightly soiled loads that are washed immediately after use. Fine china and crystal can be washed in this program by using low temperature setting and turning off the Heat Dry

Delay

Lets you delay running the dishwasher for five hours. After making your selections, press Delay then press start and close the door. The dishwasher will start five hours later. (DFUD140 only)

After you have selected the wash cycle and options, press Start. The indicator lights will flash rapidly, alternating from left ot right. This merely means the machine is ready. Close the door securely to start the dishwasher.

AFTER THE UNIT HAS STARTED

The dishwasher is programmed to stop operating if the door is opened during a cycle. If you want to change a program or option after starting the machine, open the door slightly to let the spray arms stop rotating and avoid getting sprayed with water. Press and hold START for three (3) seconds to cancel the current selection then press the touch pad(s) for your desired selection. Press Start again and close the door. The drain pump will run to remove any dirty water from the dishwasher before starting the newly selected cycle. Check to make sure there is still detergent in the detergent dispenser.

WHEN THE WASH IS FINISHED:

The indicator lights will come on for the last wash program and options that you used. (NOTE: The unit will not retain the Rinse or China program; it will revert to the Normal or Pots wash program.)

DFUD042 / DFUD142

Wash Cycles

Pots/Pans — For heaviest soiled loads, such as pots and pans, casserole dishes, etc. This cycle uses high water temperatures.

Heavy — For heavily soiled items.

Normal — For normally soiled loads, such as plates, glasses, bowls and lightly soiled pans.

Light China — For lightly soiled loads that are washed immediately after use. Fine china and crystal can be washed in this program by using low temperature setting and turning off the Heat Dry.

Quick — For very lightly soiled dishes.

Rinse/Hold — To rinse dishes that you plan to wash later that day.

Options

Top/Bottom rack — Allows you to choose to wash only the top rack, bottom rack, or both racks. The corresponding symbol lights the rack(s) you have selected. (DFUD142 only)

Temperature — Selects a hight or water temperature for the wash program. Indicator light glows when on the high setting and remains off when on low setting.

Delay — Lets you delay running the dishwasher for five hours. After making your selections, press Delay then press start and close the door. The dishwasher will start five hours later.

Extra Dry — Activates a longer drying cycle to dry the dishes.

Express — Washing time is reduced and wash temperatures are lowered. (Not available for use with Quick Wash or Rinse/Hold cycles). (DFUD142 only)

Start Stop — After you have selected the wash cycle and options, press Start. The start symbol will flash. This merely means the machine is ready. Close the door securely to start the dishwasher.

CHANGING A PROGRAM AFTER THE UNIT HAS STARTED

The dishwasher is programmed to stop operating if the door is opened during a cycle. If you want to change a program or option after starting the machine, open the door slightly to let the spray arms stop rotating and avoid getting sprayed with water. Press and hold START for three (3) seconds to cancel the current selection then press the touch pad(s) for your desired selection. Press Start again and close the door. The drain pump will run to remove any dirty water from the dishwasher before starting the newly selected cycle. Check to make sure there is still detergent in the detergent dispenser.

WHEN THE WASH IS FINISHED:

The indicator lights will come on for the last wash program and options that you used. (NOTE: The unit will not retain the Rinse/Hold or Quick program.)

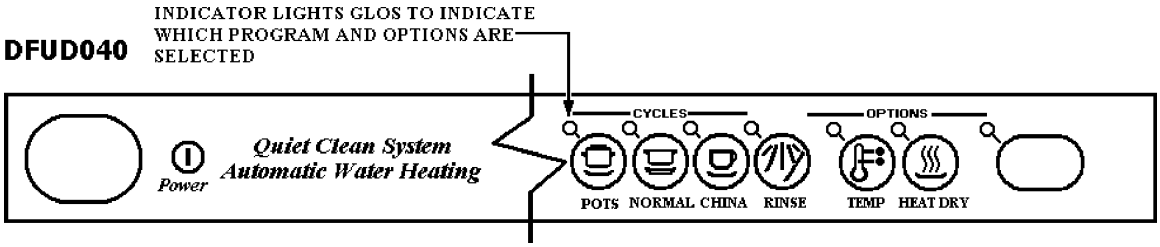

DFUD040 Fault Testing:

1) Press the **RINSE** cycle button five times within 15 seconds to enter the component test mode.
2) Press the **POTS** cycle button to test the inlet valve.
1) Press the **NORMAL** cycle button once to test the detergent dispenser. (Be sure to close the dispenser before this test is perform Press **NORMAL** once to increase fill time be fifteen seconds.
2) Press **CHINA** once to increase fill time by thirty seconds.
3) Press **RINSE** once to increase fill time by sixty seconds.
4) Press **HEAT DRY** once to increase fill time by one hundred seconds.

Drain Time Adjustments:

1) Press **POTS** cycle button five times within 15 seconds to enter this mode.
2) Press **POTS** once to decrease drain time by five seconds.
3) Press **NORMAL** once to reset the drain time to the normal default mode.
4) Press **CHINA** once to increase the drain time by ten seconds.
5) Press **RINSE** once to increase the drain time by twenty seconds.
6) Press **HEAT DRY** once to increase the drain time by sixty seconds.

Protected Start

1) Press **NORMAL** cycle button five times within 15 seconds to enter this mode.
2) Press **CHINA** once to obtain a three second protected start.
3) Press **NORMAL** once to obtain the normal default start.
3) ed)
4) Press the **NORMAL** cycle again to test the rinse aid dispenser.
5) Press the **CHINA** cycle button once to test the heating element. (Use caution when checking the heating element as an injury may occur.)
6) Press the **RINSE** cycle once to test the circulation pump. (Pump will continue to operate until another button is pressed.)
7) Press the **HEAT DRY** button once to test the drain pump and vent fan motor (Pump and fan will continue to operate until another button is pressed.)

   To exit this test mode press **START/STOP** once.

Inlet Time Adjustments:

5) Press **CHINA** cycle button five times within 15 seconds to enter this mode.
6) Press **POTS** to reset to the normal default fill time.

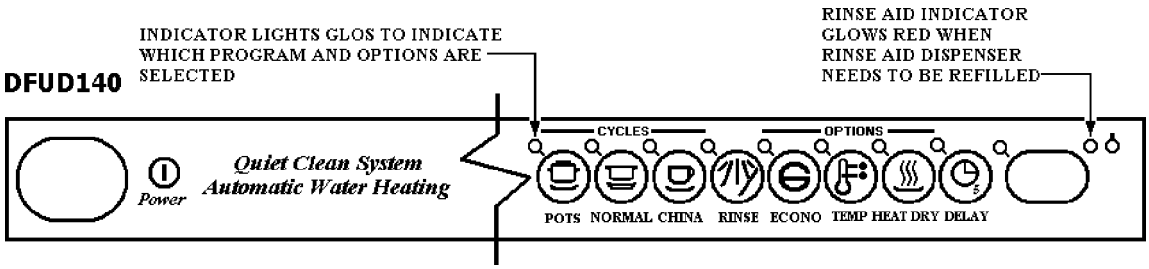

Fault Tracing: Press TEMP (6) five times and then:

1) Press **Normal** (2) to start **Inlet Valve 2** (Not on all models)
2) Press **China** (3) to start **Inlet Valve 1**
3) Press **Rinse** (4) to start **Combination Dispenser**
4) Press **Econo** (5) to start **Heater**
5) Press **Temp** (6) to start **Circulation Pump**
6) Press **Heat Dry** (7) to start **Drain Pump** (and Fan/Vax motor VUD040)
7) Press **Delay** (8) to start **Fan/Vax Motor** (not DFUD040)

Press Start/ Stop to exit Fault Mode.

Drain Time Adjustments: Press China (3) five times to Enter Reprogramming Mode.

1) Press **China** (3) to get **20** seconds Drainage Time
2) Press **Rinse** (4) to get **25** seconds Drainage Time
3) Press **Econo** (5) to get **35** seconds Drainage Time.
4) Press **Temp** (6) to get **45** seconds Drainage Time.
5) Press **Heat Dry** (7) to get **85** seconds Drainage Time.

Extra Rinse: You can get an extra rinse in the programs, Pots, Normal and China by doing this:

1) Press Normal (2) five times within 15 seconds. Then you get into the changing program. The program will show how many rinses the machine last gave, and you get an extra rinse or press Rinse and you get the normal number of rinses.

Fault Tracing: Press TEMP (6) five times and then:

8) Press **Normal** (2) to start **Inlet Valve 2** (Not on all models)
9) Press **China** (3) to start **Inlet Valve 1**
10) Press **Rinse** (4) to start **Combination Dispenser**
11) Press **Econo** (5) to start **Heater**
12) Press **Temp** (6) to start **Circulation Pump**
13) Press **Heat Dry** (7) to start **Drain Pump** (and Fan/Vax motor VUD040)
14) Press **Delay** (8) to start **Fan/Vax Motor** (not DFUD040)

Press Start/ Stop to exit Fault Mode.

Drain Time Adjustments: Press China (3) five times to Enter Reprogramming Mode.

6) Press **China** (3) to get **20** seconds Drainage Time
7) Press **Rinse** (4) to get **25** seconds Drainage Time
8) Press **Econo** (5) to get **35** seconds Drainage Time.
9) Press **Temp** (6) to get **45** seconds Drainage Time.
10) Press **Heat Dry** (7) to get **85** seconds Drainage Time.

Extended Fan Cooling: You can cool down the washing items under 30 minutes after heated drying by the fan cooling. Press Econo (5) for extended fan cooling.

1) Press **Pots** (1) five times within 15 seconds. Then you get into the **changing program.**
2) Press **Rinse** (4) and you get **30** minutes **extra fan cooling,** or press **China** and you get the **normal fan cooling.**

Geographical location of switches on the

keyboard. (Some switches are not displayed on some models.)

THE INDICATING LAMPS
DFUD140

The indicating lamps serve several purposes: besides showing the selected program, they are also used if you need to trace a fault in the machine.

Indicates that the door is open when attempting to start a program, –

or is opened while a program is running ———

Indicates a fault in the heater. ———

Indicates high water level in the machine ———

Indicates a thermistor fault (heater control) ———

FAULT TRACING: If the machine doesn't work properly, you can identify the reason. This allows you to describe to service personnel and save repair time.

Start the fault-tracing program by pressing TEMP pushbutton 5 times within 15 seconds.

These lamps will respond be flashing: 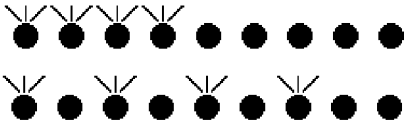

Marked symbol:	Tests:	If nothing is wrong, this happens after closing the door:
	Water inlet valve	Water can be heard entering.
	Detergent / rinse aid solenoid	There will be a click, and detergent/rinse aid is coming out
	Heater	The element heats up. WARNIG: Don't touch it!
	Circulation pump	The pump starts
	Outlet pump	The pump starts
	Fan motor	The fan starts and air is blowing out by the lower left corner of the door.

Leave the test program by pressing START

DFUD040/140

Illustrated below is a normal program and the sequence in which the various components are connected.

NORMAL WASH

Component		Comments
Outlet pump	25 seconds	
RINSE/HOLD		
Inlet valve	540 pulse*	0.7 gal
Circulation pump	30 sec	High pressure upper arm**
Pause	1 sec	
Circulation pump	240 sec	High pressure lower arm**
Circulation pump	60 sec	High pressure upper arm**
Circulation pump	240 sec	High pressure lower arm
Circulation pump	60 sec	High pressure upper arm
Outlet pump	2 sec	SCS stage
Circulation pump	20 sec	SCS stage, High pressure upper arm
Outlet pump	25 sec	
CLEANING STEP		
Inlet valve	300 pulse*	0.4 gal
Circulation pump	30 sec	High pressure upper arm
Pause	5 sec	
Circulation pump	5 sec	High pressure upper arm
Pause	5 sec	
Circulation pump	5 sec	High pressure upper arm
Outlet pump	25 sec	
MAIN WASH		
Inlet valve	540 pulse*	0.7 gal
Circulation pump	60 sec	High pressure upper arm
Circulation pump, dispenser	3 sec	High pressure upper arm
Circulation pump, element	90° F	Enzyme step
Circulation pump	180 sec	
Circulation pump, element	130° F	
Circulation pump	600 sec	
Circulation pump	60 sec	High pressure upper arm
Outlet pump	2 sec	SCS stage
Circulation pump	20 sec	SCS stage, high pressure upper arm
Outlet pump	25 sec	

DFUD042

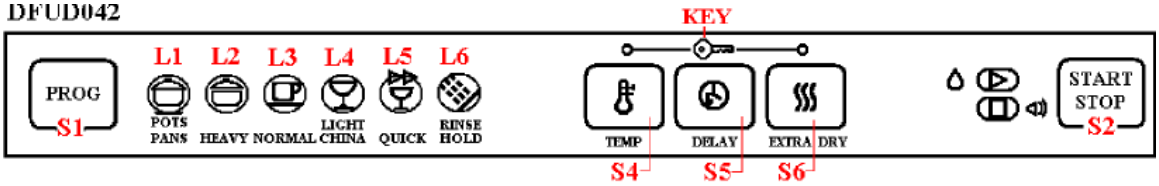

DFUD142

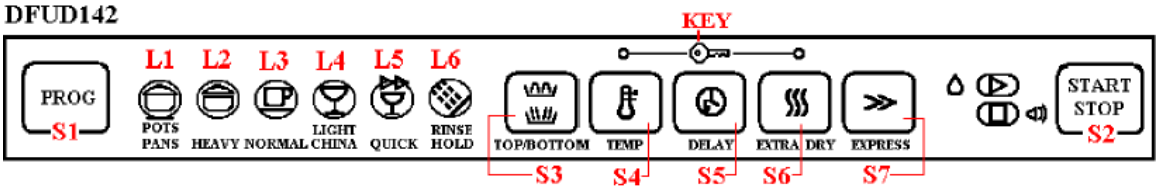

Drying Selection:
(LED lights when long drying is selected). Long and Normal drying (Quick wash; Long and Short drying.)

Washing in both Baskets:
Both baskets washing (basic setting). The machine's upper and lower baskets are loaded with items to be washed.

<u>Washing in Upper Basket:</u> (DFUD142 only) Most of the process water is directed by the spray arm divider to the upper spray arm.

<u>Washing in Lower Basket:</u> (DFUD142 only)
Most of the process water is directed by the spray arm divider to the lower spray arm.

Delayed Start:
Program start delayed by five hours.

Express: (DFUD142 only)
Reduces the main wash temperature and lowers the rinse temperature in machines with a fan and shortens the drying time.

Variant (Variable) Settings:
If the control unit is replaced, the machine will automatically be in the variant setting menu when the power supply is switched on for the first time.

1) **Press the program button S1 repeatedly until the desired model is selected.**
   L1 lit: Model without Super rinse option (S7)
   L2 lit: Model without Super rinse option (S7)
2) **Confirm your choice by pressing Start (S2). The machine senses the presence of the turbidity and pressure sensors and the spray arm divider. The program returns to the main menu.**

If you wish to access the variant settings menu again: Activate the service menu, press Start (S2) three times within five seconds.

Water Hardness setting:
Activation of the setting menu:
1) **Turn off the main switch**
2) **Wait for at least 5 seconds**
3) **Keep the Start button depressed (S2)**
4) **Turn on the main switch**
5) **Release the Start button (S2)**
6) **Select the desired water hardness with the Program button (S1)**
   • Water Hardness (°dH)
   All LED's 0 –5 Extinguished
   L1 lit 6 – 8 L2 lit 9 – 14
   L3 lit 15 – 19 L4 lit 20 – 29
   L5 lit 30 – 44 L6 lit 45+ Confirm your choice be pressing Start (S1). The program returns to the main menu.

Child lock: (DFUD142only)
Activation of setting menu:

1. Turn off the main switch
2. Wait for at least 5 seconds
3. Keep the Temperature and Drying selection buttons depressed (S4 & S6)
4. Turn on the main switch
5. Release the Temperature and Drying selection buttons (S4 & S6)
6. Select the status with the program button (S1).
   L1 extinguished, key extinguished: Child lock deactivated.
   L1 lit, key lit: Child lock activated.
7. Confirm your selection by pressing Start (S2)

The program returns to the main menu.

To unlock the child lock temporarily, the Temperature (S4) and Drying selection (S6) buttons must be press simultaneously. The machine can now be opened normally for three minutes.

Total reset:
To reset the machine to its basic settings.

1. Turn off the main switch
2. Wait for at least 5 seconds
3. keep the Program button depressed (S1)
4. Turn on the main switch
5. Release the Program button (S 1)

The machine now resets various settings, although not the water hardness and intake volume, and senses the presence of the turbidity and pressure sensors and the spray arm divider. The machine then reverts automatically to the main menu.

SERVICE MENU:

1. Turn off main switch
2. Wait for at least 5 seconds
3. keep the Program and Start buttons depressed (S1 & S2)
4. Turn on the main switch
5. Release the Program and Start buttons (S1 & S2)

The most recent fault is indicated as L1-L6. Press the Program button and index through the following components.

1. Inlet valve
2. Detergent and detergent dispenser
3. Circulation pump
4. Heating element and circulation pump (Max 165° F)
5. Fan
6. Drain pump

Keep the Program button depressed for three seconds to adjust the water intake Press the Program button and index through the following:
L1-L6 extinguished; Normal water intake volume.
L1 lit; Water intake volume is reduced by 10%.
L2 lit; Water intake volume is reduced by 5%.
L3 lit: Time-controlled water intake
L4 lit: Water intake volume is increased by 5%.
L5 lit: Water intake volume is increased by 10%.
L6 lit: Water intake volume is increased by 15%.
Confirm your choice by pressing Start (S2). The program returns to the main menu.

TROUBLESHOOTING:
If there are problems with poor washing results, you must observe the following rules in the first instance:

- Use a suitable program, such as Normal program 130° F / 140° F for normally soiled items.
- If more heavily soiled items are to be washed, e.g. saucepans or gratin dishes, select a stronger program, such as Heavy wash or intensive wash.
- It is important to use a suitable detergent, preferably one which has produced good results in tests.
- You should not buy a bulk pack, because detergent is a perishable product. The detergent dose must also conform to the recommendations on the pack. **Above all, avoid overdosing.**
- The spray arms must not be obstructed and they must rotate at the correct speed (12 – 25 rpm). Make sure that the machine takes in the correct quantity of water, see the user handbook.

MOST COMMON FAULTS:
If the dishwasher does not work, you should first check whether this may be due to a simple fault which the customer himself can correct. Identify the fault with the help of the following questions.

Machine will not start

- Are the fuses intact?
- Is the machine connected to the mains?
- Is the door properly closed?
- Is the water tap open?

If you have answered "YES" to the above questions, and if the machine appears to be without a power supply, you should first check that a power supply is present as far as the main switch and as far as the control unit.

If the machine indicates that something is wrong, e.g. "Open door" even though the door is closed, check the door switch.

If the machine indicates "Overfilling", check the overfilling system (micro switches, hoses, etc.

Water remains in the machine

- Is there a blockage in the drain hose? Check the connection at the union with the building's drains.
- Is there a kink in the drain hose?
- Are the filters blocked?
- Is the drain pump blocked?
- Is the gauge block on the left I the sump next to the drain pump incorrectly seated?

If you have answered "NO" to the above questions, first check that the drain pump has a power supply and that it is working. The pump must be replaced if it is faulty. If there is no power supply to the pump, check the output from the control unit. Replace the control unit if it is defective.

The dishwasher is not clean

- Are the spray arms able to move freely?
- Are the holes in the spray arms free from dirt?
- Is the detergent being dispensed correctly? Check that you are dispensing according to the hardness of the water.

- Is the fine filter securely attached?
- Are you using the correct wash program?
- Is the machine correctly loaded?

If you have answered "YES" to the above questions, you should check the following:

- That the machine has the correct quantity of water.
- That the spray arms are moving in the right direction and rotating at the correct speed (minimum 12 rpm).
- That the circulation pump is working as intended.
- That the spray arm divider is working as intended.
- That the machine empties the water properly (no residual water present before refilling).

Cloudiness or stains on washed items

- Is the rinse aid dispenser correctly set?
- Is the temperature correctly set?

If you have answered "YES" to the above questions, you should check the following;

- Spray arms
- Circulation pump
- Element
- Combined dispenser
- Spray arm divider

Does the machine stop at the beginning of the wash program?

- Is the water tap fully open?
- Is the filter at the screwed nipple of the supply hose clean?

If you have answered "YES" to the above questions, you should check the:

- Inlet valve
- Float
- Micro switch

FAULT CODES

In the fault codes below, "L" denotes LED and "F" denotes fault code on the display.

L1 / F1 Temperature stop fault

The temperature rise is less than 50° F in five minutes. The program exits from the heating stage and continues in the process. Indication only in the service menu.

CHECK:

- Element
- Thermistor
- Water level
- Circulation pump
- Control unit
- Wiring

L2 / F2 Overfilling

Too much water in the machine (pressure sensor) or float activated. If the water has not been evacuated within 60 seconds, the program will be interrupted (drain pump activated).

CHECK:

- Drain pump
- Blockage in the hoses
- Flow sensor
- Inlet valve
- Leakage
- Wiring

L3 / F3 Thermistor fault

Interruption or >176° F. The program exits from the heating stage and continues in the process. Indication only in the service menu.

CHECK:

- Thermistor
- Control unit

L4 / F4 Water intake fault

<80 pulses within 60 seconds or correct number of pulses is not achieved with 255 seconds. Program interrupted.

CHECK;

- Water supply
- Flow sensor
- Inlet valve
- Wiring

L5 / F5 Valve leakage

>80 pulses detected when the inlet valve is deactivated. Certain models attempt to remedy the leak first. Any program in progress is interrupted (drain pump activated).

CHECK:

- Leakage through inlet valve
- Flow sensor

L6 / F6 Pressure sensor fault

Output signal > 4.8 V. The program continues. Indication only in the service menu.

CHECK:

- Pressure sensor
- Control unit
- Wiring

L1 + L2 / F7 Pumping out fault

Water not evacuated after 120 seconds pumping out. Program interrupted.

CHECK:

- Drain pump
- Hoses
- Installation of drain hose
- Control unit
- Wiring

L1 + L3 / F8 Blocked filter

The pressure sensor senses excessively low pressure during the final rinse. Indication after end of program.

CHECK:

- Filter
- Sump (pressure chamber)
- Pressure sensor.

L1 + L4 / F9 Circulation fault

The pressure sensor senses excessively low pressure (e.g. no water in the machine) or excessively high pressure (e.g. the circulation pump is defective). The program exits from the heating stage and continues in the process. Indication only in the service menu.

CHECK:

- Circulation pump
- Filter
- Water level
- Pressure chamber
- Pressure sensor

L1 + L6 / Fb Spray arm divider fault

Position contact is continuously closed or open. The program proceeds. Indication only in service menu.

CHECK:

- Spray arm divider
- Function of gear box
- Contacts
- wiring

DISHWASHER QUESTIONS

1) **Occasionally my dishes don't get as clean as usual?**
   - **a.** The upper spray arm may have been blocked and couldn't rotate. Make sure the upper spray arm can revolve freely.
   - **b.** Make sure you load the dishes with the soiled surfaces facing downward and toward the center of the dishwasher. Also, don't stack bowls, pots, and such so that water cannot reach the surfaces.
   - **c.** Use only fresh, unscented, granular dishwashing detergents. If the detergent is old and clumped, you should discard it.
   - **d.** Normally, you only need d1 to 2 tablespoons of detergent, if you have hard water in your area, however, you may need to use a little more.
   - **e.** You should wait until you're ready to start the dishwasher to put in the detergent. Otherwise, it could get damp and won't dissolve properly.
   - **f.** Make sure the rinse and dispenser is filled, and you might need to increase the amount of rinse aid being dispensed. (See Owner's Manual)
   - **g.** Make sure the filters are clean and the drain is clear to prevent soil from getting redeposited on dishes.
   - **h.** Check to see if something blocked the detergent flap so it did not open completely. This is the problem if it still contains detergent.

2) **How can I keep my upper rack from coming out on its own?**
   This usually means the dishwasher is not level. Adjust the locking nuts on the front legs to raise the machine slightly higher in front. This should also improve the performance of your dishwasher.

3) **What kind and how much detergent should I use?**
   - a. We recommend that you use only fresh, unscented, granular automatic dishwashing detergents. We don't recommend tablets or liquid detergent because they could cause the machine to over suds. If you use tablets, you should cut them in half. If you use liquid detergents, you should use only half the recommended amount. We do not recommend liquids because they also do not clean as well as powders.
   - **b.** Viking products are extremely water-efficient. Since they use about half the water of conventional dishwashers, you need half the detergent. We recommend that you start using one tablespoon of detergent for a normal wash load. More heavily soiled pots and pans may need a little more, but only add one-half to one tablespoon more. You should never use more than three tablespoons, and that includes the pre-wash dispenser.
   - **c.** In areas with exceptionally hard water, you may need more detergent. Try using slightly more with each load until they come out to your satisfaction. You should never use more than 3 tablespoons.

4) **Why are all my dishes coming out cloudy? What should I do?**
   - **a.** This is complicated question because it can vary according to your water, detergent, and how you do your dishes. First, you should not rinse your dishes before you wash then in a Viking or any other dishwasher with the new cleaning

Systems that are vastly superior to what you probably have now. Scrap off the pieces, but don't pre-wash them. Interestingly enough, food that has been wet and then allowed to dry is harder to remove because it bonds more firmly to the item (plates, silverware). Don't be afraid to leave soil on items, the Viking Super Cleaning System can handle just about anything you throw at it and it actually works better when it's challenged. This is because the enzymes in the detergent need something to attach themselves to and it should be food particles, not your dishes. If there is little to no soil on our dishes when you start the wash program, then the enzymes will find minute scratches in your dishes and glassware and attach themselves to that scratch and eventually make it even bigger. This is called etching and it cannot be reversed.

If you are not pre-washing, and depending upon the hardness of your water, very often this cloudiness can be the result of using either too much detergent and/or too much rinse aid. Try cutting back on both. Using too much of these is also common when people switch from older machines that used 10 – 15 gallons of water to today's dishwashers that use from 4 – 8. when you use less water, you should use less detergent and rinse aid. And always use a high quality detergent. Unfortunately, some of these suggestions can be derailed by the water. For example, people living in parts of Nevada have this problem if they use too little detergent. If all else fails, re-read you Use & Care Guide and then call Viking Consumer Center for help and guidance.

5) **Is it normal to have water standing in the bottom of my dishwasher?**
   - **a.** It is normal to have some water left in the sump area near the drain. If the water is more than halfway up the coarse filter, you may need to clean the filters or check for blockage in the drain pump. If this doesn't resolve the problem, make sure the air gaps aren't blocked in the drain hose.
   - **b.** It's also possible that you need to lengthen the drain time (electronic models)

6) **How can I tell if the rinse aid dispenser if full?**
   - **a.** The black dot on the rinse aid dispenser indicates the rinse aid dispenser has enough for the next load. If the dot is clear, you need to add rinse aid. For units with electronic rinse aid indicator, the light will come on when more rinse aid is needed.

7) **Where is the serial number on the machine?**

   The serial numbers on the Viking dishwashers are located on the right edge of the inner door.

Customer Problem: "Soap cup doesn't always "open". Soap doesn't come out."

Possible Cause: Determine what wash cycle the customer is using. It is possible Dishwasher is functioning properly.

Solution: When using the "light" cycle in the dishwasher, detergent is placed on the bottom of the Inner door, not in the soap cup. The detergent cup solenoid **is not** activated during the light cycle.

Customer Problem: "The inside of my door is stained by the soap cup."

Possible Cause: The customer should refer to the use and care manual for discoloration of stainless steel. Polishing the stainless steel will bring back the original luster.

Solution: The customer should try a different brand of detergent. It is not possible to determine to determine the chemical components which cause this. Changing the inner door does not remedy the situation and is not covered by the warranty.

HARDNESS OF WATER

Water has a different "hardness" or mineral content, in different locations. The hardness is measured in grains per gallon (gpg). Find out your water's hardness by asking your local water department, county extension agent or water softening company. Ask how many "grains" of hardness are in your water.

The **harder** the water is the **more** detergent you need. For the recommended detergent amounts to use with your water, follow the guidelines on the chart below. With hard water, you need more detergent to get dishes clean. With **soft** water, you need **less** detergent.

Water Hardness Grains per Gallon	Amount of detergent (powder or liquid)
Soft Water 0 -- 4 gpg	1 teaspoon to 1 tablespoon
Medium Hard Water 4 -- 8 gpg	2 1/2 tablespoons
Hard Water 8 -- above gpg	3 tablespoons

Too much detergent with soft water can cause "etching", a permanent cloudiness of glassware. If you have "hard" water, the dishes as well as the dishwasher itself may accumulate a gray deposit after some time. This deposit can be remedied by using a mild citric acid solution instead of detergent in the heavy wash program.

HARD WATER AND CLEANIBILITY

With the decrease in water resources over the past few years, the hardness of water has increased. As the water table goes down, the concentration of salts and minerals in the water increases. This has caused what is perceived to be a cleaning problem with dishwashers, and is true for all brands. By having a large concentration of minerals in the water, they are difficult to remove during the washing process and are deposited on the dishes and tank.

You will hear many descriptions of the ”cleanability problem.” The most common of these problems or complaints is hard water spotting and a white or tan film on the dishwasher tank dishes, and glasses. Because the Viking is stainless steel, it is more noticeable than on other finishes. But, the problem is a universal one.

Complaint:

(1) Dishes are not coming clean.
(2) Dishes and glassware have white spots or film on them.
(3) Dishwasher tank has spots of white film or dishwasher tank is completely covered with white water scale.

Causes:

(1) Hard to very hard water areas.
(2) Well water with high content of chemicals such as calcium and magnesium carbonate (lime).
(3) Low water table in draught stricken areas increases concentration of chemicals in the water supply.
(4) High water temperatures cause chemicals to be released from the water. Viking units set on high temp will cause more chemicals to be released.

Solutions:

(1) Clean tank of dishwasher first. This can be accomplished by filling the soap dish full of *fresh* dishwasher detergent.
    a. Place temperature knob in the low temperature no heat dry cycle. Place the cycle selector knob on heavy and let the cycle finish completely.
(2) Wash dishes at the low temperature and increase detergent level.
    a. Hard water – use 2 to 2 ½ tablespoons detergent.
    b. Very hard water – use 2 ½ to 3 tablespoons of detergent. (Increase fro extremely hard water.)

GENERAL INFORMATION

- The **Circulation Pump** circulates the water at a rate of 52 to 55 gallons per minute.
- The water circulates during **Heating**.
- **1800 Watt** heating element for faster heating times.
- **Water** is heated to 86° F during the first prewash.
- The drain pump may be cleaned from inside the machine.
- Timed controlled inlet of water.
- 4.6 gallons of water consumed during the normal wash cycle.
- Only 1 tablespoon detergent per normal load.

Storing the detergent:
For best results, keep your detergent container tightly closed after each use, out of reach of children and stored in a cool, dry place. **Storage under the sink is not advisable** for powered detergents, because this area is generally too warm and moist to keep detergent fresh.

If your detergent gets old or lumpy, throw it away. Old detergent looses its strength and lumpy detergent may not dissolve.

Rinse Aids
A rinse aid causes water to flow off the dishes quicker, preventing droplets that dry as spots and making drying performance better. Rinse aids come in solid and liquid forms. Your dishwasher's rinse aid dispenser uses the liquid form. For the best results, use a liquid rinse aid only if you have moderately hard to hard water. Rinse aids used with soft water can cause a cloudy film on dishes.

Filling the rinse aid dispenser:
Drying will usually be better if you use a rinse aid. There is a level indicator next to the rinse aid container which shows whether it is empty of full. If the indicator appears completely black, there is sufficient rinse aid. If the size of the black spot is reduced, the container requires filling.

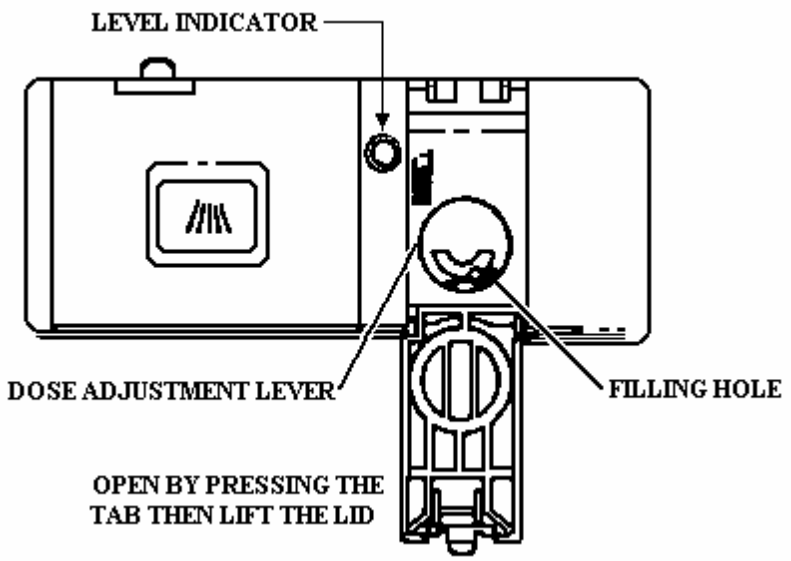

Adjusting the dosage of the rinse aid:
The rinse aid dosage is set by the manufacturer and is dispensed automatically into the final rinse. If necessary, the rinse aid dosage can be adjusted by inserting a screwdriver inside the filler hole where the adjustment device is set on "1". However, when using hard water (above 8 gpg) a rinse aid containing citric acid can be used. Under these circumstances the dosage can be increased by setting the dial to "3" or "4".

NOTE: Too much rinse aid is not advisable as this might result in the formation of foam, especially if the dishwasher is connected to cold water supply.

DISHWASHING

WASHABILITY

FOOD SPECKS OR POORLY CLEANED DISHES Occasionally, a few items may have un-removed food soil left on item at the end of the cycle.

POSSIBLE CAUSES:

- **Water temperature is too low.** Water should be 140° F. as it enters the dishwasher.

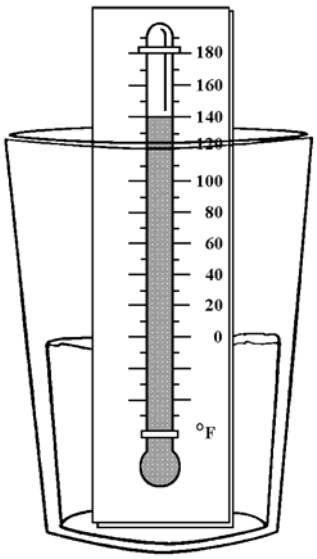

Turn up the setting on the water heater. If the dishwasher is not near the water heater, let the water from the hot water tap run before starting the dishwasher in order to clear the line of cold water, especially when using a short wash cycle.

If the water temperature is too low, an alternative to turning up the water heater is to use a water heating option (available on some models). When selected, the heating element in the dishwasher comes on during water circulation to boost the water temperature for better results.

- **Not using enough dishwasher detergent** for the degree of water hardness or the amount of food soil. A general recommendation is one teaspoon of detergent for each grain of water hardness (gpg). Use a minimum of three teaspoons (one tablespoon) in soft water. Extra detergent may be needed for greasy pans or casseroles. Refer to the chart below.

WATER HARDNESS	DETERGENT USE
Soft (0 –4 grains)	**1 – 2 Tbs**
Medium (5 – 8 grains)	**2 – 3 Tbs.**
Hard (9 – 12 grains)	**3 – 4 Tbs.**

Your local water utility can tell the degree of hardness of the water supply. In rural areas the state university extension service can explain how to test the water hardness.

- **Improper loading.**
  A. Blocking the center spray nozzle or jet wash tower. If a large bowl or pan is placed in the center of the lower rack, the wash action will be blocked when the rack is pushed in.
  B. Larger items shielding smaller items from washing action.
  C. Nesting bowls, spoons, silverware so water cannot reach all surfaces.
  D. Restricting the rotation of either of the spray arms. For example, a tall item in the upper rack or an item falling through the lower the rack.
  E. Blocking the detergent dispenser with a large object prevents the detergent from mixing with the water. Read User's Guide for other loading recommendations.

- **Improper fill.** Satisfactory results can be achieved if water pressure is between 18 and 120 psi. After the fill, the water level should be about even with the heating element in the bottom of the dishwasher. If pressure is borderline, see that no other faucet is in use while dishwasher is operating. Check to assure the dishwasher is level front to back and side to side.

- **Shortage of hot water.** Use the dishwasher at times hot water is not being used for other household purposes, such as laundry, baths or showers. If a thermostatic water heating option is available, recommend its use. The cycle will only be extended to heat water when needed.

- **Old or caked dishwasher detergent** may not dissolve completely. Purchase fresh detergent and store detergent in a dry place (not under the kitchen sink).0

- **Detergent placed in the dispenser cup incorrectly.** Reread User's Guide so detergent is placed in the cup correctly for cycle selected.

SAND LIKE DEPOSIT

Occasionally, a sand-like or salt and pepper-like deposit may be found in the bottom of cups and glasses or on other items washed in the dishwasher.

POSSIBLE CAUSES:

- **Improper loading.** Reread User's Guide for the dishwasher. Avoid placing glasses over the tines which can interfere with the washing and rinsing of the item.

- **Shape of the article.** It is difficult for the washing action to get inside and thoroughly clean items with small openings. Such as baby bottles, vases, certain pitchers or juice containers. If changing position of item in rack does not solve the problem, wash these items by hand.

- **Low water temperature.** Water temperature should be at least 140° F. to properly dissolve dishwasher detergent. Turn up the setting on the water heater or use a water heating option regularly.

- **Granular dishwasher detergent** which has been stored too long in a damp area after the box has been opened may not dissolve during the wash cycle. Purchase fresh detergent and store in a dry place with spout closed. Do not store underneath the kitchen sink.

- **Wash cycle too short.** A longer wash cycle will help ensure all the food soil is completely removed.

CLOUDY GLASSWARE

HOW TO IDENTIFY THE TYPE OF FILM:

Removal of film indicates hard water filming. If the film is not removed, the glasses are etched. Use ONE of the following methods to remove film.

1. Soak the glass approximately 15 minutes in undiluted white vinegar. Rinse and dry.
2. Wash the glass in a basin of water using a generous amount of dishwasher detergent. [Wear rubber gloves to protect your hands from the strong detergent solution.]
3. Use a film remover such as Glass Magic according to instructions.

HARD WATER FILMING

POSSIBLE CAUSES:

- **Hard water and not using enough dishwasher detergent** may leave hard water minerals which dry on the surface of glassware creating a film. Un-removed food soil may also cause filming. Increase the amount of detergent according to the degree of water hardness (one teaspoon per grain). See page 17 for a chart with the amount of dishwasher detergent according to water hardness. For water hardness over 12 grains, add additional detergent (1 teaspoon for each grain over 12) at the beginning of the main wash portion of the cycle. (Open door, add detergent to bottom of tub, close door and dishwasher will continue through cycle). Certain water conditions, such as extreme hardness, may make it virtually impossible to use a dishwasher. Water softeners are available to improve water quality.

- **Low water temperature.**
  Adjust the water temperature so that it enters the dishwasher at 140° F. Use a water heating option, if available.

- **Not using a rinse aid.** Use a rinse aid, such as Jet Dry according to the dishwasher's User's Guide.

TO REMOVE: Wash dishes in the dishwasher using glass Magic according to package directions. If filming is extremely bad, it may be necessary to repeat the procedure.

ETCHING: The permanent film known as etching occurs in unusual circumstances where the surface of glass is pitted or eroded. In the beginning stages etching may be identified by an iridescent look – shade of blue. Purple, brown or pink may be seen when the glass is held at an angle to the light. In advanced stages the glassware appears frosted or cloudy.
Certain types of glass will etch in any dishwasher with the combination of soft water (especially mechanically softened), the alkalinity of dishwasher detergents and heat. There is not way to remove etching, the damage is permanent. Neither is there any way to predict what glassware may be affected. It is not related to the cost or quality of the glass.

TO PREVENT RECURRENCE:

- **Adjust the amount of detergent** according to water hardness. (One tablespoon per wash cycle is the minimum amount of detergent recommended.) See page 17 for a chart with the recommended amount of dishwasher detergent according to water hardness.

- **Lower water temperature** so that it enters the dishwasher at approximately 140°F. Do not use water heating options.

- **Use the Air Dry option.**
- **Do not manually pre-rinse dishes before loading in dishwasher.** Removing all the food soil prior to loading simply increases the possibility of etching.

WATER SPOTTING AND RACK MARKS

Spots are caused by dissolved salts and minerals remaining on glasses and flatware after the water evaporates. This usually happens in hard water, but can also happen in mechanically softened water.

POSSIBLE CAUSES:

- **Not enough dishwasher detergent.**
  Increase the amount of dishwasher detergent according to water hardness. See page 17.

- **Not using a rinse aid.** Use a rinse aid, such as Jet Dry according to the dishwasher's User's Guide.

- **Low water temperature.** Adjust water temperature so it enters the dishwasher at 140° F or use a water heating option, if available.

POOR DRYING

POSSIBLE CAUSES:

- **Using the Air Dry cycle.** Switch to heated drying.

- **Low water temperature.** It should be 140° F as it enters the dishwasher. Either adjust water heater or use a water heating option, if available.

- **Not using a rinse aid** such as Jet Dry.

- **Placing detergent in the dispenser cup incorrectly.** Reread the User's Guide.

- **Using too little detergent.** Detergent contains ingredients which help to improve drying. Increase the amount of detergent used as directed on page 17.

- **Dishes nesting.** Be sure dishwasher is being loaded properly.

- **Some items are difficult to dry in a dishwasher even under the best of circumstances.** Cups and glasses with concave bottoms will hold water at the end of the cycle. Plastics have a porous surface that holds droplets of water and is difficult to dry. Towel drying of these items may be necessary.

THE DISHWASHER

DETERGENT NOT WASHED OUT OF DISPENSER

POSSIBLE CAUSES:

- **Water temperature too low.** Make sure the water temperature is 140° F. as it enters the dishwasher or use a water heating option, if available.

- **Cup wet when granular detergent is added.** Dry detergent cup before filling.

- **Detergent left in cup for a long time period.** Detergent should not be added until you are ready to start the dishwasher (unless using the delay start feature found on select models.)

- **Blocked cup.** Check to be sure no utensils such as a pan or cookie sheet are place in the front of the lower rack so the detergent cup is blocked from the water action which flushes the detergent from the cup.

- **Detergent placed in wrong side of cup.** Place detergent in right cup (as you are facing dishwasher) and close cover. If using a Regular or Pots & Pans cycle, place detergent in left cup as well.

- **Overfilling cup.** This can cause the cover to stick and prevent the detergent from being washed out of the cup.

BROWN, BLACK OR RED DISCOLORATION OF DISHWASHER INTERIOR OR DISHES

POSSIBLE CAUSE:

- Sometimes the dishes or the interior of the dishwasher may turn a brown, red or black color if iron or manganese is in the water.

SOLUTION:

A. To remove discoloration from dishwasher interior, dishes and glassware (no metal items) use a rust remover such as Rust Remover. it may be obtained from a parts distributor. To use:
   1. Start empty dishwasher on Rinse& hold or Rinse portion of the cycle.
   2. During fill, open the door and add ½ cup of rust remover to the water. Allow the dishwasher to complete the cycle.
   3. Follow with a detergent wash.
   4. Use a rinse aid to improve drying results following a rust removal applications.

B. The only permanent solution is to install special filters which can remove iron and manganese from the water.

LIME DEPOSITS ON INTERIOR OF DISHWASHER

POSSIBLE CAUSE:

- If an unusual amount of calcium is in the water, a lime film or deposit may eventually build up on the interior surface.

SOLUTION: Try one of the following to remove the deposit:

A. Use a damp cloth and a mild scouring powder.

B. Start empty dishwasher on Rinse & Hold or Rinse portion of the cycle. During fill, open door and add ½ cup white vinegar to water. Allow dishwasher to complete cycle. Do not use detergent. Follow with a regular detergent wash.

C. Use Lime-A-Way* or a dishwasher cleaning product such as Glisten according to manufacturer's directions.

NOISY OPERATION—UNFAMILIAR SOUNDS

Sometimes a new dishwasher may sound different than the model it replaced. Some of these sounds can be the result of the improved performance or new features of today's dishwasher.

POSSIBLE CAUSES:

- **A hissing of the water valve** during fill, water circulation sounds and a humming during the drain are normal sounds.
- **Dishwasher is not loaded properly.** Load items so dishes do not touch each other and the wash arms do not hit items when they rotate.
- **Chopping and grinding noise** may be heard during drain when the internal food disposer (?) is chopping hard items such as fruit seeds, nuts, glass, etc.
- **Installation** (location, flooring, cabinetry, etc.) can affect noise level.

SUDS OR FOAM IN DISHWASHER

POSSIBLE CAUSES:

- **Use of soap or detergent not designed for automatic dishwashers** will result in excessive sudsing and interfere with the washing action. Use ONLY automatic dishwasher detergents.
- **Use of too much or too little dishwasher detergent** in various water conditions could cause sudsing. For recommended amounts of detergent according to water hardness, see page 17. Avoid pre-rinsing the dishes prior to loading.
- **Water not hot enough** to activate defoaming agents in detergent. Adjust water temperature to 140° F. or use water heating option, if available.
- **Use of generic or store brand dishwasher detergent.** This type of detergent may not contain enough defoaming agents to break down suds. Switch brands of detergent.

ODOR IN DISHWASHER

POSSIBLE CAUSES:

- **Dishes washed infrequently.** Wash dishes more often or use the Rinse & Hold cycle (if available) until a full load accumulates.
- **Vinyl odor in new dishwasher.** If a dishwasher is quite new, a vinyl or plastic odor may be noticed from the vinyl-coated racks. The more frequently the dishwasher is operated, the faster the odor will go away.

SOLUTION: To minimize the odor, follow one of these recommendations:

A. Place baking soda in the detergent cup. Select a short wash cycle and let the water circulate about 5 minutes. Stop the dishwasher by unlatching the door and let stand overnight. After the standing period, restart the dishwasher by latching the door and let it complete the cycle.

B. Select a short wash cycle and let the dishwasher fill with water. After it has filled, open the door and pour one cup of liquid chlorine bleach into the water. Close the door and let the dishwasher complete the cycle.

DINNERWARE AND FLATWARE

CHIPPING OF DISHES OR GLASSWARE

POSSIBLE CAUSE:

- Chipping usually occurs during normal use and handling and simply may not be noticed until dishes are removed from the dishwasher. When the dishes are loaded properly according to manufacturer's instructions, there is nothing in the dishwasher that will chip dishes. The dishes should only come in contact with the cushioned racks.

SOLUTION:

Follow manufacturer's instructions for loading the dishwasher. Do not place more than one item between each set of tines. Plates and saucers should lean back against the tines rather than tilting forward. When placing crystal in the dishwasher, leave space between each item to prevent them from touching. **Washing extremely light weight and fragile crystal and china in the dishwasher is not recommended.**

In the event of frequent breakage of dishes in an older dishwasher, check the spray arms for cracks or splits that could interfere with their turning.

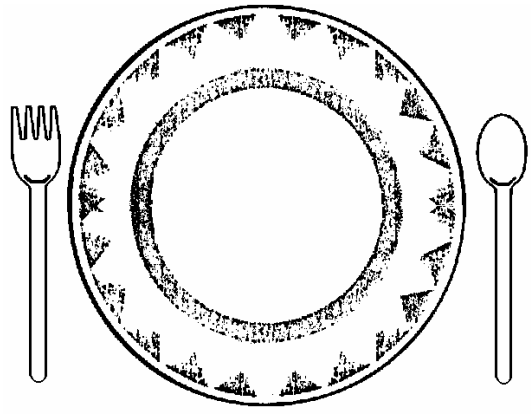

METAL MARKS ON DISHES AND GLASSWARE

POSSIBLE CAUSE:

- If a metal item, especially aluminum, touches a dish in the dishwasher, small black or gray marks or streaks may be left on dishes or glasses. A metal mark can be transferred from the racks in the dishwasher to other dishes. Washing disposable aluminum containers such as pie pans in the dishwasher may result in metal marks since these items are lightweight, the washing action may move them. However, most metal marks occur during normal use when dishes come in contact with flatware.

SOLUTION:

Load the dishwasher carefully to prevent metal items from touching other dishes.

TO REMOVE:

Try Zud∗ or Delete∗ with a wet cloth, sponge or paper towel. Follow directions on package.

DISCOLORATION OF SILVERPLATE

POSSIBLE CAUSE:

- When silverplate takes on a copper or bronze color appearance, the silverplate has worn thin and the base metal is showing through. The combination of dishwasher detergent and lack of hand toweling may result in discoloration of this base metal.

SOLUTION: The discoloration can usually be removed be polishing with a silver polish or by soaking in vinegar for 10 minutes. This treatment is temporary, however, and only replating with silver by a jeweler will correct the problem.

TARNISHING OF SILVERWARE (STERLING OR SILVERPLATE)

POSSIBLE CAUSES:

- **Sulfur in the water supply.** The effect may be accelerated by automatic dishwashing because of the higher water temperature and because the usual towel drying has been eliminated. Since sulfur cannot be readily removed from the water supply, frequent polishing is the only answer.
- **Contact with foods such as mayonnaise and eggs.** If silver has been in contact with such foods, it should be rinsed thoroughly as soon as possible after use, either by hand or using Rinse & Hold if the dishwasher is not to be run immediately after the meal.

STAINLESS STEEL

BLUISH DISCOLORATION

POSSIBLE CAUSE:

- Some types of stainless steel will take on a bluish cast when washed in the dishwasher because of heat and the alkalinity of automatic dishwasher detergent.

SOLUTION:

The discoloration can be removed by using a paste of baking soda and water or a stainless steel cleaner.

CORROSION OR RUSTING

POSSIBLE CAUSE:

- When stainless steel (knife, spoon, pan, etc.) is made a passivation process forms a protective oxide film on the surface of the steel. It is this film of oxide which makes stainless steel "stainless". When it is removed, corrosion (rusting) will take place as with ordinary steel, through at a slower rate.

  Certain foods will remove this oxide film – table salt, vinegar, salad dressings, milk and milk products, fruits and juices, tomatoes and tomato products and butter. If the stainless is washed, rinsed and dried thoroughly, the oxygen in the air will heal the breaks in the oxide film and return the stainless property to the steel. But, if food is not washed off promptly (for example, when a few dishes and flatware are left in the dishwasher until a full load accumulates), the air cannot heal the break and corrosion will take place.

SOLUTION:

There is not permanent solution. To minimize rusting, rinse or wash as soon as possible. Polishing with a silver or stainless steel cleaner may temporarily remove the corrosion.

ITEMS NOT TO BE WASHED IN A DISHWASHER

Most tableware, cookware and silverware can be safely washed in the dishwasher. If there are any doubts about a particular piece of dishware, check with the manufacturer to see if it is dishwasher safe. If the manufacturer cannot be reached, test-wash a small item for several weeks before attempting to wash an entire set.

DISHWASHER GUIDELINES

MATERIAL	DISHWASHER SAFE	SPECIAL INFORMATION
ALUMINUM	Yes, except anodized aluminum and some cookware	High water temperature and detergents may affect finish. Check cleaning instructions.
CAST IRON	No	Seasoning will be removed and iron will rust.
CHINA/STONEWARE	Yes, except antique or hand painted china.	Always check manufacturer's recommendation before washing. Antique, hand-painted or over-the-glaze patterns may fade. Gold leaf may discolor. It in doubt. Test-wash a small item for several weeks before washing an entire set.
CRYSTAL	Yes, except antique or light-weight delicate crystal	Always check manufacturer's recommendation before washing. Some types of leaded crystal may etch with repeated washings. If in doubt test-wash a small item for several weeks before washing an entire set.
GLASS	Yes, except milkglass	Milkglass will yellow with repeated dishwasher washing.
GOLD PLATED FLATWARE	No	Will discolor.
HOLLOW-HANDLE KNIVES	No	Handles may be attached to the blade with adhesives which may loosen if dishwasher washed.
PEWTER	No	High water temperatures and detergent may Discolor or pit finish.
DISPOSABLE PLASTICS	No	Cannot withstand high water temperatures and detergents.
PLASTICS	Yes (if labeled "dishwasher safe")	Always check manufacturer's recommendation before washing. Plastics vary in their capacity to withstand high water temperatures and detergents.
STAINLESS STEEL	Yes	Run a Rinse & Hold cycle if not washing immediately. Prolonged contact with foods containing salt, vinegar, milk products or fruit juice could damage finish.
STERLING SILVER OR SILVERPLATE	Yes, except those with Commercial "darkening".	Run a Rinse & Hold cycle if not washing immediately. Prolonged contact with foods containing salt, acid or sulfide (eggs, mayonnaise and seafood) could damage finish. Commercial "darkening" may be removed be detergent.
TIN	No	May rust
WOODEN ITEMS	No	Always check manufacturer's recommendation before washing. Wood may warp, crack or Discolor.